AGENDA
BOARD OF BUILDING STANDARDS/
ARCHITECTURAL BOARD OF REVIEW/SIGN REVIEW

PRE-REVIEW MEETING
CITY OF LAKEWOOD
12650 DETROIT AVENUE
EAST CONFERENCE ROOM
MAY 2, 2024
4:00 P.M.

REVIEW MEETING
CITY OF LAKEWOOD
12650 DETROIT AVENUE
AUDITORIUM
MAY 9, 2024
5:30 P.M.

1. **ROLL CALL**
2. **APPROVE THE MINUTES OF THE APRIL 11, 2024 MEETING**
3. **OPENING REMARKS**

NEW BUSINESS

SIGN REVIEW

4. **Docket No. 05-32-24** — **15637 Madison Ave.**
Cyrano's Place

( ) Approve
( ) Deny
( ) Defer

Shawn Warren
Erie Design Co. Inc.
16504 Detroit Ave.
Lakewood, OH 44107

Applicant proposes vinyl window graphics. (Page 5)

5. **Docket No. 05-33-24** — **13341 Madison Ave.**
Linda Moselle

( ) Approve
( ) Deny
( ) Defer

Shawn Warren
Erie Design Co. Inc.
16504 Detroit Ave.
Lakewood, OH 44107

Applicant proposes PVC lettering in the sign band. (Page 10)

6. Docket No. 05-34-24 **18206 Detroit Ave.**
Harry Buffalo

( ) Approve
( ) Deny
( ) Defer

Iliana Kazandjiev
Agile Sign & Lighting Maintenance Inc.
35280 Lakeland Blvd.
Eastlake, OH 44095

Applicant proposes an electronic message sign on side of building. (Page 16)

7. Docket No. 05-35-24 **12215 Clifton Blvd.**
AIY Properties

( ) Approve
( ) Deny
( ) Defer

Jim Briola
North Coast Sign and Lighting Services Inc.
310 N. Broadway St.
Medina, OH 44256

Applicant proposes a non-illuminated monument sign. (Page 27)

8. Docket No. 05-36-24 **16304 Detroit Ave.**
Lakewood Bottle Shop

( ) Approve
( ) Deny
( ) Defer

Joe Palecek
Advanced Installation & Sign Service
28 Elevator Ave.
Painesville, OH 44077

Applicant proposes an internally-illuminated double-sided blade sign. (Page 40)

9. Docket No. 05-37-24 **14055 Madison Ave.**
Barber Lounge Lakewood

( ) Approve
( ) Deny
( ) Defer

Steven Foster
The Sign & Graphics Firm, LLC
14837 Detroit Ave., Ste. 195
Lakewood, OH 44107

Applicant proposes a non-illuminated double-sided blade sign. (Page 49)

10. Docket No. 05-38-24 **15501 Madison Ave.**
Vital Pilates

( ) Approve
( ) Deny
( ) Defer

Steven Foster
The Sign & Graphics Firm, LLC
14837 Detroit Ave., Ste. 195
Lakewood, OH 44107

Applicant proposes halo-lit steel stud mounted letters on front of the building. (Page 52)

11. Docket No. 05-39-24 **13733 Madison Ave.**
Doki Doki

( ) Approve
( ) Deny
( ) Defer

Steven Foster
The Sign & Graphics Firm, LLC
14837 Detroit Ave., Ste. 195
Lakewood, OH 44107

Applicant proposes painted 6 mm DiBond sheeting sign board in the sign band. (Page 55)

NEW BUSINESS

ARCHITECTURAL BOARD OF REVIEW

12. **Docket No. 05-40-24** **(C)** **1375 West Clifton Blvd.**
Lakewood Congregational Church

( ) Approve
( ) Deny
( ) Defer

David T. Maddux
The Arcus Group Inc.
1244 Smith Ct.
Rocky River, OH 44116

Applicant proposes a new entrance and railing on the west side of the church. (Page 58)

13. Docket No. 05-41-24 **(R)** **1246 Manor Park Ave.**

( ) Approve
( ) Deny
( ) Defer

Charles A. McGettrick
Architects, C.A. McGettrick LLC
14551 Madison Ave.
Lakewood, OH 44107

Applicant proposes a new front porch and two-story addition with breezeway leading to two-car garage on the rear of the home. (Page 74)

14. Docket No. 05-42-24 **(R)** **1605 St. Charles Ave.**

( ) Approve
( ) Deny
( ) Defer

James. E. Nagy
GMJ Acquisitions
20102 Center Ridge Rd.
Rocky River, OH 44116

Applicant proposes front facade and side porch renovation of an existing house. (Page 91)

15. Docket No. 05-43-24 **(R)** **2020 Arthur Ave.**

( ) Approve
( ) Deny
( ) Defer

Brandon Young
Young Design Studio LLC
15614 Detroit Ave.
Lakewood, OH 44107

Applicant proposes renovation of an existing house with a two-story addition on the south side. (Page 103)

16. Docket No. 05-44-24 **(R)** **17401 Edgewater Dr.**

( ) Approve
( ) Deny
( ) Defer

Amanda Fort
Dane Street Studios
2708 Inverness Rd.
Shaker Heights, OH 44122

Applicant proposes a new front porch on an existing house. (Page 133)

17. Docket No. 05-45-24 **(R)** **1188 Elbur Ave.**

( ) Approve
( ) Deny
( ) Defer

Hal Daugherty
Daugherty Construction
22460 Lakeland Blvd.
Euclid, OH 44132

Applicant proposes a new front portico. (Page 204)

ADJOURN

"*Individuals with disabilities who require accommodations for participation in meetings must request accommodations at least 3 business days ahead of the scheduled meeting. Contact Michelle Nochta at (216) 529-5906 michelle.nochta@lakewoodoh.gov* ."

BOARD OF BUILDING STANDARDS
ARCHITECTURAL REVIEW BOARD
SIGN REVIEW BOARD

12650 Detroit Avenue ● (216) 529-6630 ● FAX (216) 529-5907 ● www.lakewoodoh.gov

Application Cover Page

Docket No.: 05-32-24

Permit No.: BBS24-000031

Applicant Name: Shawn Warren, Erie Design Co. Inc.

Project Address: 15637 Madison Ave.

Project Name: Cyrano's Place

Project: Applicant proposes vinyl window graphics.

Cut vinyl graphics for windows

Logo	50”h x 45”w	16 sq ft.
Fencers	105”w x 52”h	38 sq. ft.
Text info	38”w x 45”h	12 sq.ft

66 total

windows 53” x 69” windows 53” x 69”

Store front 501”w x 175”h =608 sq. ft.
windows 53” x 69” x 6 = 153 sq. ft.

ERIE deSign
Signs, Banners & Graphics
216-227-0043
www.eriedesign.com

CLIENT:	JOB #:	DATE:
Cyrano’s Place		
ADDRESS:	SALESPERSON/ DESIGNER:	DATE:
15639 Madison Ave.		

REVISION HISTORY:

DATE:	CHANGES MADE:

CLIENT SIGNATURE OF APPROVAL DATE:

16504 Detroit Avenue Lakewood, Ohio 44107 216-227-0043

Store front as is

Store front 501”w x 175”h =608 sq. ft.
windows 53” x 69” x 6 = 153 sq. ft.

ERIE deSign
Signs, Banners & Graphics
216-227-0043
www.eriedesign.com
16504 Detroit Avenue Lakewood, Ohio 44107 216-227-0043

CLIENT:	JOB #:	DATE:
Cyrano’s Place		
ADDRESS:	SALESPERSON/ DESIGNER:	DATE:
15639 Madison Ave.		

REVISION HISTORY:

DATE:	CHANGES MADE:

CLIENT SIGNATURE OF APPROVAL DATE:

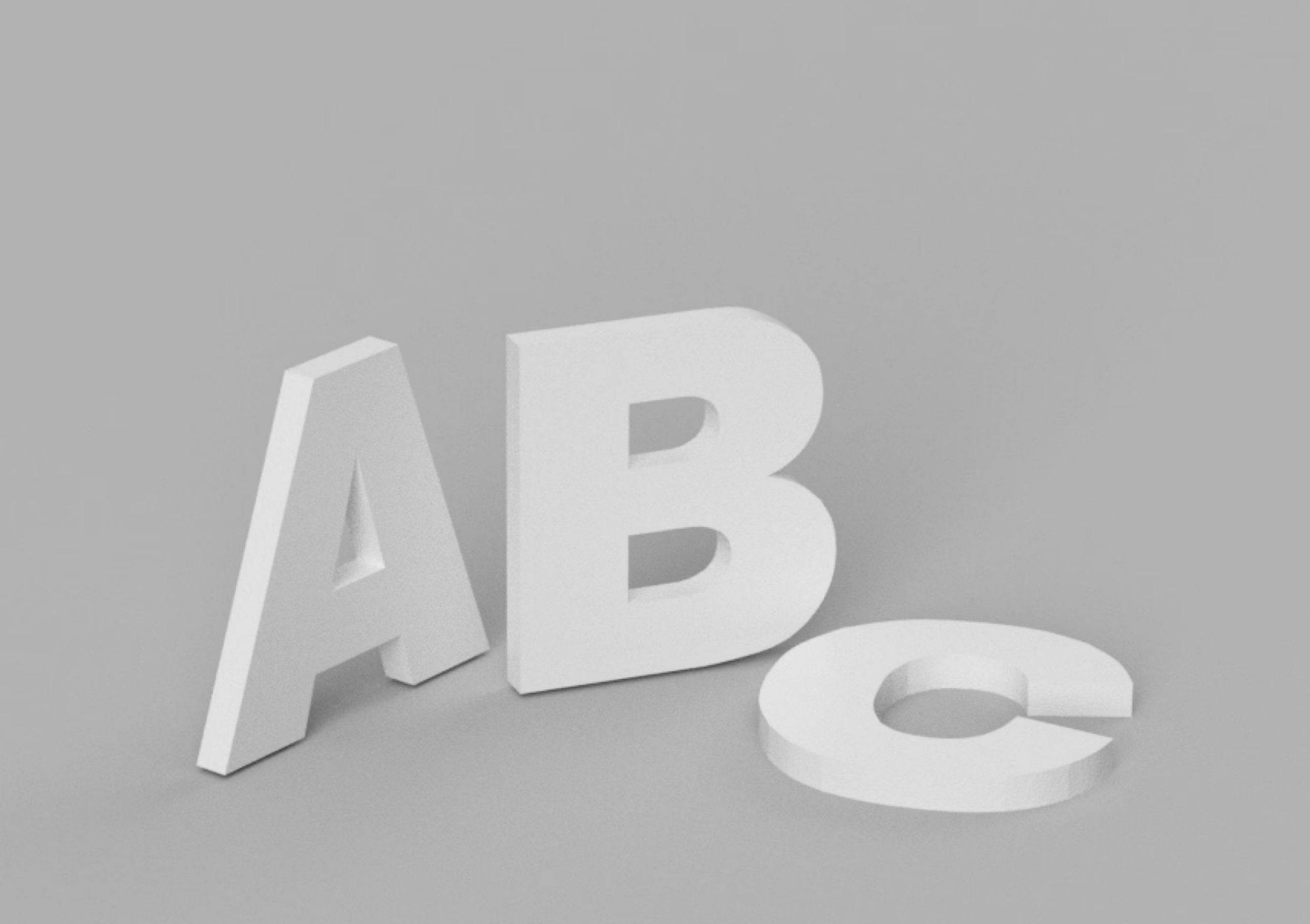
ABC

DIVISION OF HOUSING AND BUILDING
12650 DETROIT AVENUE • LAKEWOOD, OHIO 44107

MAIN (216) 529-6270
FAX (216) 529-5930
building.permits@lakewoodoh.net
www.lakewoodoh.gov

APPLICATION FOR COMMERCIAL PLAN APPROVAL

(For projects subject to the provisions of the Ohio Building Code Section 107.2)

ALL INFORMATION MUST BE PROVIDED AND LEGIBLE

Project Location [OBC 107.2-2]:

Street Address: 15639 Madison Ave. 31316007
Floor Number: _____ Suite: _____
Is this building in the floodplain? ☐ Yes ☐ No

Project Information [OBC 107.2-1]:
(Project Use and Occupancy [OBC 107.2-3])

Project Type (check all that apply):
☐ New Building ☐ Alteration ☐ Addition ☐ Repair
☐ Fence, pool, paving, landscaping, shed, tent, other ☒ Sign

Project Scope (check all that apply):
☐ Demolition ☐ General Building ☐ Mechanical (HVAC)
☐ Electrical ☐ Plumbing ☐ Fire Protection (see below)
☐ Site Work over 8,000 sq. ft.

Describe the (proposed) use (e.g.: Restaurant, boutique, office, etc.):
RE- FACE EXISTING ACRYLIC SIGN FACE ON MONUMENT SIGN

Occupancy class [OBC Chapter 3]: _____
If Mixed Use [OBC 508.1] **check one**:
☐ Separated ☐ Non-separated ☐ Accessory only

Construction Type [OBC Chapter 6]: _____

Total Project Work Area: 66 total **Sq. Ft.**

Total cost of construction (valuation): $ $659

Describe the project:
Cut vinyl graphics for windows 66 total
Logo 50"h x 45"w 16 sq ft.
Fencers 105"w x 52"h 38 sq. ft.
Text info 38"w x 45"h 12 sq.ft
Store front 501"w x 175"h =608 sq. ft.
windows 53" x 69" x 6 = 153 sq. ft.

Fire Protection Systems [OBC 106.1.1.1]

(Indicate all that apply as "**E**" for Existing, "**N**" for New, or **NA** if none)

Building Sprinkler System ___ Limited Area Sprinkler System ___
In-Rack Sprinkler System ___ Demand at Riser Base _____ psi
Kitchen Hood Suppression ___ Fire Alarm System _____
Fire Detection System ____ Smoke Detection System _____

Required Construction Documents [OBC Section 106]

3 sets required for Building Department plus
1 set for Fire Department Review (if applicable)
1 (Civil) set for Engineering Review (if applicable)
Date on Plans: 2-21-24

Applicant Information [OBC 107.2-5]
(Building Owner or Representative)

Name: Sara Kass
Business Name: Cyrano's Place
Mailing Address: 15639 Madison Ave.
City/State/Zip Code: LAKEWOOD, OH 44107
Phone Number: 216-227-3835
For Best Service Provide Email Address:
info@cyranosplace.info

Registered Design Professional [OBC 106.2.1]

☐ Architect ☐ Engineer
☐ Certified Fire Protection System Designer ☐ NA

Name: Shawn Warren
Firm or Business: Erie design
Certificate or Registration Number: on file

Mailing Address: 16504 detroit Ave
City/State/Zip Code: Lakewood Oh 44107
Contact Name: Shawn Warren
Contact Phone: 216-227-0043
For Best Service Provide Email Address:
eriedesign@ameritech.net

Certification [OBC 107.2.5]

I certify that I am the building ☐ Owner ☒ Owner's Authorized Agent

All information provided on this application is true, accurate and complete to the best of my knowledge. All official correspondence in connection with this application should be sent to my attention at the mailing address above. I consent to these plans being reviewed in the order of plans examination determined by the building official.

Signature: _____
Printed Name: Shawn Warren
Date of Application: 3-21-24

For Building Department Use

Case Number: _____
Date Received: _____
Received By: _____

Other Approvals Required (prior to permit issuance):
Fire Marshall: ☐ Yes ☐ No ☐ NA
Engineering ☐ Yes ☐ No ☐ NA
ABR/Planning/Zoning: ☐ Yes ☐ No ☐ NA

Plan Review Fees
Outside Plans Examiner: $_____
Stormwater Review: $ _____

BOARD OF BUILDING STANDARDS
ARCHITECTURAL REVIEW BOARD
SIGN REVIEW BOARD

12650 Detroit Avenue ● (216) 529-6630 ● FAX (216) 529-5907 ● www.lakewoodoh.gov

Application Cover Page

Docket No.: 05-33-24

Permit No.: BBS24-000032

Applicant Name: Shawn Warren, Erie Design Co. Inc.

Project Address: 13341 Madison Ave.

Project Name: Linda Moselle

Project: Applicant proposes PVC lettering in the sign band.

AS IS

ERIE deSign
Signs, Banners & Graphics
216-227-0043
www.eriedesign.com

CLIENT:	JOB #:	DATE:
LINDA MOSELLE		
ADDRESS:	SALESPERSON/ DESIGNER:	DATE:
13341 MADISON AVE		

REVISION HISTORY:

DATE:	CHANGES MADE:

CLIENT SIGNATURE OF APPROVAL DATE:

16504 Detroit Avenue Lakewood, Ohio 44107 216-227-0043

12” PVC 1/2” cut lettering total sq ft. 7.55’
adhesive mount to existing sign area $460
Installation $120
City permits est. average $ 200

1/2” thick PVC text 12”h x 107” w $460
+ INSTALL AND PERMITS

ERIE deSign
Signs, Banners & Graphics
216-227-0043
www.eriedesign.com

CLIENT:	JOB #:	DATE:
LINDA MOSELLE		
ADDRESS:	SALESPERSON/ DESIGNER:	DATE:
13341 MADISON AVE		

REVISION HISTORY:

DATE:	CHANGES MADE:

CLIENT SIGNATURE OF APPROVAL DATE:

16504 Detroit Avenue Lakewood, Ohio 44107 216-227-0043

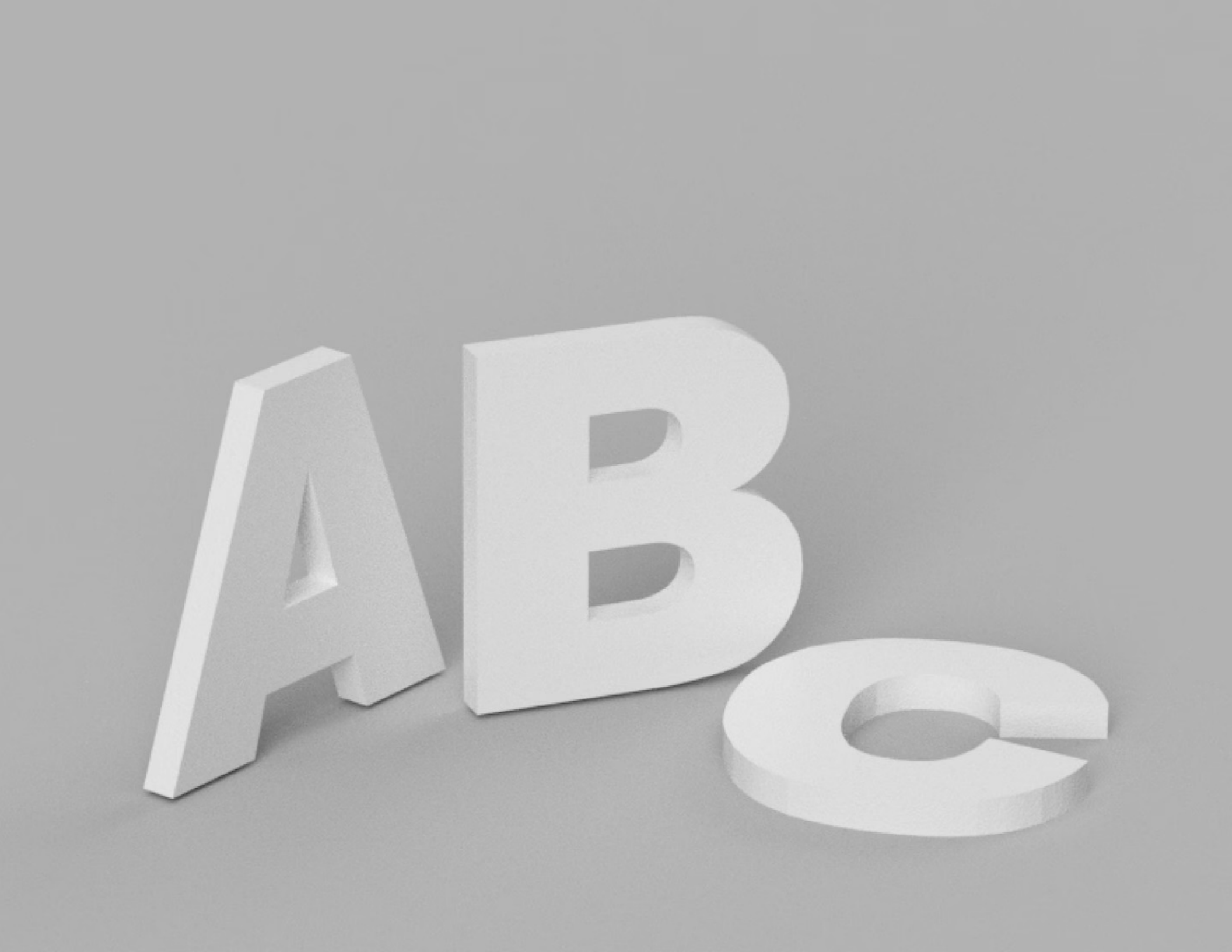
ABC

Blade logo 36"w x 36" h 18 sq. ft. 2 sides mounted to brick with 4) 3" lags and shields

Case #:

City of Lakewood Division of Housing and Building
12650 DETROIT AVENUE • LAKEWOOD, OH 44107 • (216) 529-6270 • Fax: (216) 529-5930
Building.permits@lakewoodoh.net

Building Permit Application

PROJECT ADDRESS: 13341 Madison Ave. Suite/Unit #

or **PERMANENT PARCEL NUMBER:** 31518012

PROPERTY CLASSIFICATION: ☐ 1, 2 or 3 Family OR ☐ Commercial (*includes multifamily and condominiums*)

USE DESCRIPTION: *(1-Family, Retail, Restaurant, etc.)* ☐ Change of Use?

PERMIT TYPE: ☐ Building ☐ ***Plumbing** ☐ ***Mechanical** ☐ ***Electrical** ***(complete reverse side)***

RELATED CASES: ☐ Correction Notice ☐ Plan Review ☐ A.B.R. Approval Case Number:

SCOPE OF PERMIT *(Check all that apply)*:

☐ New Primary Structure ☐ Addition ☐ Alteration ☐ Repair ☐ Equip. Replacement ☐ Commercial Sign
☐ Tent or Temporary ☐ Rear Deck ☐ Shed ☐ Pool ☐ Water Controlling ☐ Waterproofing
☐ Commercial Hood ☐ Fire Suppression ☐ Fire Alarm ☐ HVAC ☐ Refrigeration
☐ Demolition ☐ Paving ☐ Storm Sewer ☐ Other *(Please specify)*: Sign

VALUATION:** ***(cost of the work) $ **PROJECT SIZE:** *(in square feet)*

BRIEF DESCRIPTION OF WORK: (Include scope, dimension, location) _____ **DRAIN** _____ **NO DRAIN**

Cut PVC 1/2" thick white letters adhered to surface with adhesive
12"H X 107" W 9 SQ. FT. $460 + INSTALL AND PERMITS

AREA 17.5 X 166 = 20.2 SQ. FT.

PROPERTY OWNER NAME: Megan Divincenzo Phone: 440-523-8587
Business Name (if applicable) Linda Moselle Email: megan@thesiskiss.com
Mailing Address: 13341 Madison Ave. City: LAKEWOOD, State: OH Zip: 44107
CONTRACTOR NAME: Erie design Shawn Warren Phone: 216-227-0043
License/Reg. No.: on file Email: eriedesign@ameritech.net
Mailing Address: 16504 Detroit Ave City: LAKEWOOD, State: OH Zip: 44107
ARCHITECT/ENGINEER: Phone:
Mailing Address: City: State: Zip:

I hereby certify all information contained in this application is true, accurate and complete to the best of my knowledge. Furthermore, I am the property owner of record; or an authorized representative of the contractor registered with the city of Lakewood listed above and authorized by the property owner to perform the work described. I am primarily responsible for the work described and agree to abide by the applicable provisions of law and building codes adopted by the state of Ohio and the City of Lakewood. All subcontractors working under my direction shall be registered with the City of Lakewood. Perpetuation of fraud or misrepresentation including contractors or property owners obtaining permits on behalf of an unregistered contractor is a violation of LCO §1306.69 and punishable by fines, jail time and revocation of contractor registration.

SIGNATURE OF CONTRACTOR / OWNER — DATE: 3-21-24

Anticipated Completion Date: 3-21-24

MAIN (216) 529-6270
FAX (216) 529-5930
building.permits@lakewoodoh.net
www.lakewoodoh.gov

DIVISION OF HOUSING AND BUILDING
12650 DETROIT AVENUE • LAKEWOOD, OHIO 44107

APPLICATION FOR COMMERCIAL PLAN APPROVAL

(For projects subject to the provisions of the Ohio Building Code Section 107.2)

ALL INFORMATION MUST BE PROVIDED AND LEGIBLE

Project Location [OBC 107.2-2]:

Street Address: 13341 Madison Ave. 31518012
Floor Number: _____ Suite: _____
Is this building in the floodplain? ☐ **Yes** ☐ **No**

Project Information [OBC 107.2-1]:
(Project Use and Occupancy [OBC 107.2-3])

Project Type (check all that apply):
☐ New Building ☐ Alteration ☐ Addition ☐ Repair
☐ Fence, pool, paving, landscaping, shed, tent, other ☑ Sign

Project Scope (check all that apply):
☐ Demolition ☐ General Building ☐ Mechanical (HVAC)
☐ Electrical ☐ Plumbing ☐ Fire Protection (see below)
☐ Site Work over 8,000 sq. ft.

Describe the (proposed) use (e.g.: Restaurant, boutique, office, etc.):
RE- FACE EXISTING ACRYLIC SIGN FACE ON MONUMENT SIGN

Occupancy class [OBC Chapter 3]: _____
If Mixed Use [OBC 508.1] **check one**:
☐ Separated ☐ Non-separated ☐ Accessory only

Construction Type [OBC Chapter 6]: _____

Total Project Work Area: Text 9 sq ft **Sq. Ft.**

Total cost of construction (valuation): $ $460

Describe the project:
Cut PVC 1/2" thick white letters vinyl print covered adhered to surface with adhesive
12"H X 107" W 10 SQ. FT.
NEON ROGUE TOYS

Fire Protection Systems [OBC 106.1.1.1]

(Indicate all that apply as "**E**" for Existing, "**N**" for New, or **NA** if none)

Building Sprinkler System ___ Limited Area Sprinkler System ___
In-Rack Sprinkler System ___ Demand at Riser Base _____ psi
Kitchen Hood Suppression ___ Fire Alarm System _____
Fire Detection System ____ Smoke Detection System _____

Required Construction Documents [OBC Section 106]

3 sets required for Building Department plus
1 set for Fire Department Review (if applicable)

Applicant Information [OBC 107.2-5]
(Building Owner or Representative)

Name: Megan Divincenzo
Business Name: Linda Moselle
Mailing Address: LAKEWOOD, OH 44107
City/State/Zip Code: 13341 Madison Ave.
Phone Number: 440-523-8587
For Best Service Provide Email Address:
megan@thesiskiss.com

Registered Design Professional [OBC 106.2.1]

☐ Architect ☐ Engineer
☐ Certified Fire Protection System Designer ☐ NA

Name: Shawn Warren
Firm or Business: Erie design
Certificate or Registration Number: on file

Mailing Address: 16504 detroit Ave
City/State/Zip Code: Lakewood Oh 44107
Contact Name: Shawn Warren
Contact Phone: 216-227-0043
For Best Service Provide Email Address:
eriedesign@ameritech.net

Certification [OBC 107.2.5]

I certify that I am the building ☐ Owner ☑ Owner's Authorized Agent

All information provided on this application is true, accurate and complete to the best of my knowledge. All official correspondence in connection with this application should be sent to my attention at the mailing address above. I consent to these plans being reviewed in the order of plans examination determined by the building official.

Signature: _____
Printed Name: Shawn Warren
Date of Application: 3-21-24

For Building Department Use

Case Number: _____
Date Received: _____
Received By: _____

Other Approvals Required (prior to permit issuance):
Fire Marshall: ☐ Yes ☐ No ☐ NA
Engineering ☐ Yes ☐ No ☐ NA
ABR/Planning/Zoning: ☐ Yes ☐ No ☐ NA

BOARD OF BUILDING STANDARDS
ARCHITECTURAL REVIEW BOARD
SIGN REVIEW BOARD

12650 Detroit Avenue ● (216) 529-6630 ● FAX (216) 529-5907 ● www.lakewoodoh.gov

Application Cover Page

Docket No.: 05-35-24

Permit No.: BBS24-000033

Applicant Name: Iliana Kazandjiev, Agile Sign & Lighting Maintenance Inc.

Project Address: 18206 Detroit Ave.

Project Name: Harry Buffalo

Project: Applicant proposes an electronic message sign on side of building.

AGILE
Sign & Lighting Maintenance Inc.

Attn: Iliana Kazandziev
Agile Sign & Lighting Maintenance Inc.
35280 Lakeland Blvd
Eastlake, OH 44095

March 27, 2024

Dear Iliana,

Per your request, this letter confirms ownership's approval on the enclosed drawing and authorizes Agile Sign to obtain permits needed of approved signage for Harry Buffalo located at 18605 Detroit Road, Lakewood, OH 44107.

Sincerely,

Thomas T George
Lakewood West End LLC
26202 Detroit Rd # 214
Westlake, OH 44145
216-952-6166
tgeorge@georgegroupcorp.com

Harry Buffalo
JOIN THE HERD

Site location:
18605 Detroit Avenue
Lakewood, OH 44107

RECEIVED
By Kelly McCafferty at 3:03 pm, Apr 01, 2024
S24-000017

AGILE
Sign & Lighting Maintenance Inc.

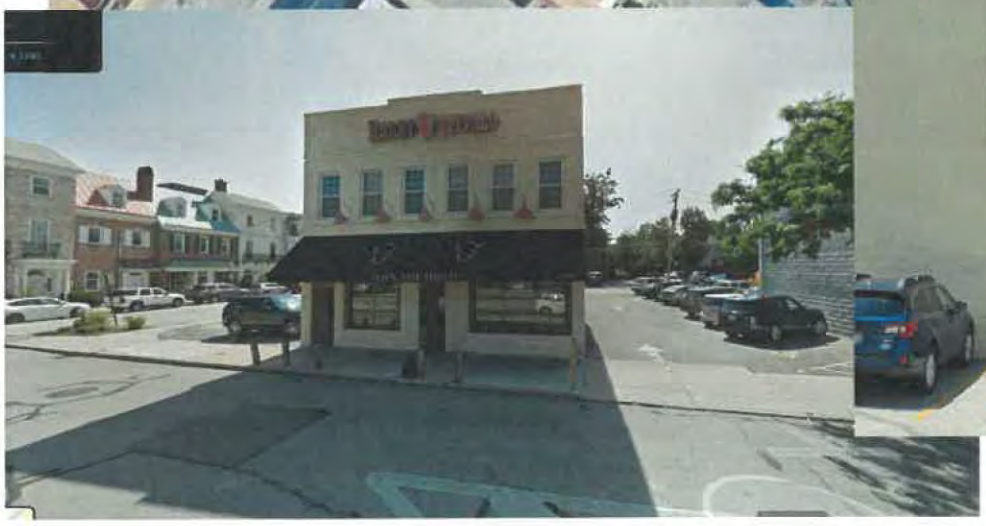

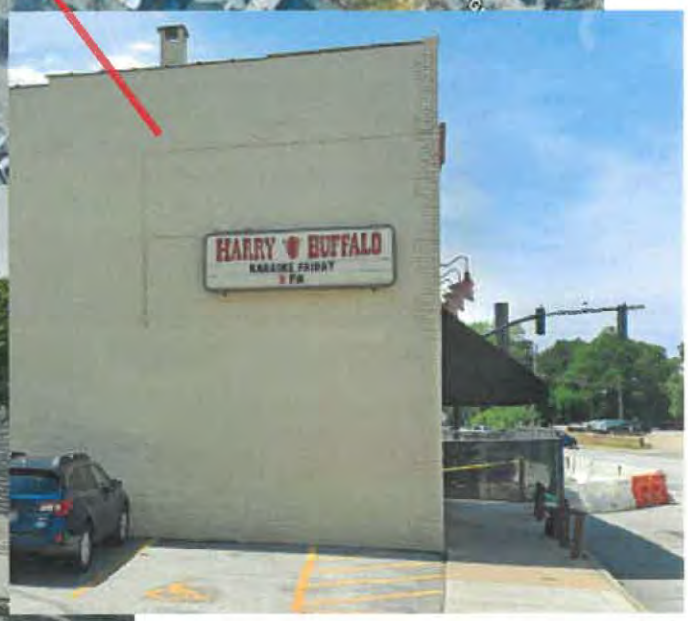

Existing sign to be replaced with new EMC

Existing site photos
Existing frontage 37'
Length of side 80'

City of Lakewood
Approved Plans
S24-000017
Christopher Parmelee
04/08/2024

Businesses to the right of Harry Buffalo

ride + workout
Across the street from Harry Buffalo

1801 Detroit Ave Lakewood

Lisby Inc

existing sne

1500 Dorait Rd Lakewood

6'x 10' Viewable

S/F ELECTRONIC MESSAGE CENTER

SCALE: 3/4" = 1'- 0"

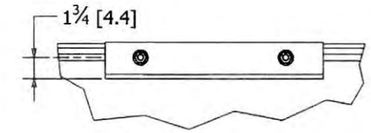

STRINGER MOUNT DETAIL
TRACK C.L. TO MOUNTING SURFACE

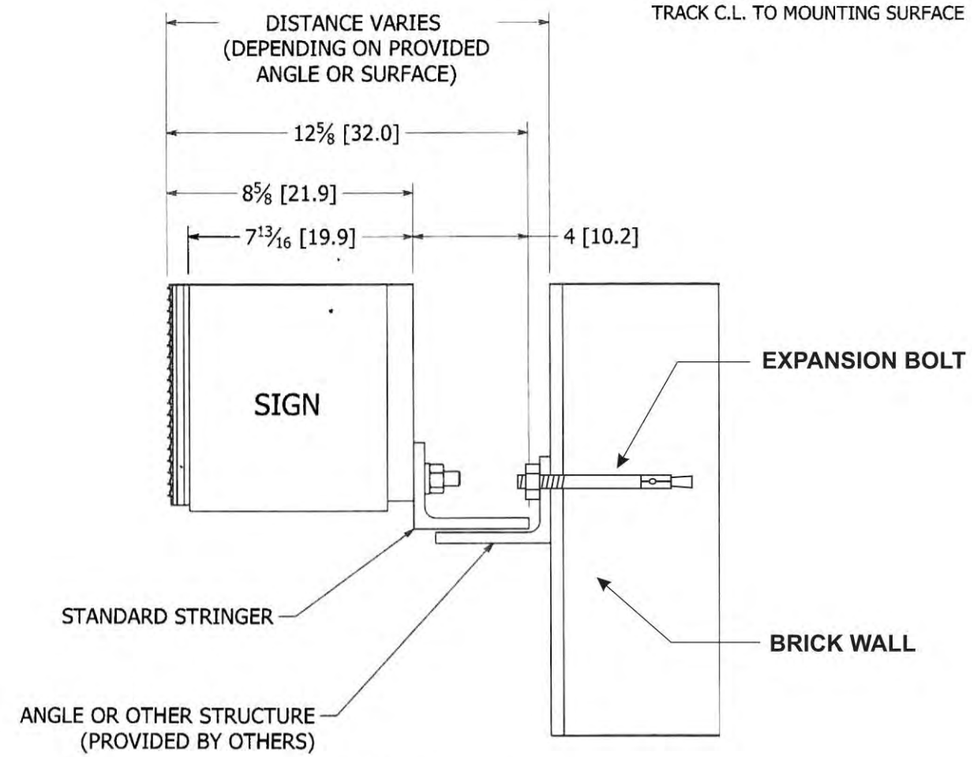

SIDE VIEW - STRINGER

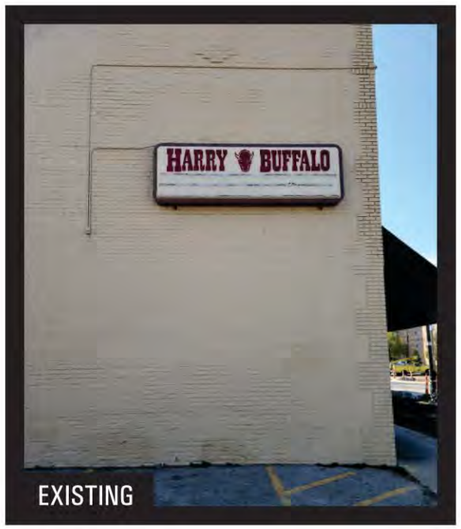

EXISTING

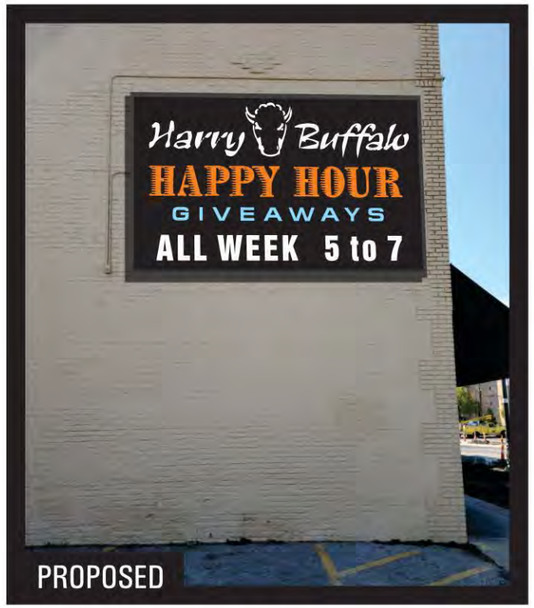

PROPOSED

COLOR NOTE:
EXACT COLORS TO BE VERIFIED BY CLIENT
TENANT PANEL LOGO'S & COLORS TO BE SUPPLIED BY CLIENT
THE INTENT OF THIS DRAWING IS TO SHOW A CONCEPTUAL REPRESENTATION OF THE PROPOSED SIGNAGE DUE TO VARIATIONS IN PRINTING DEVICES & SUBSTRATES, THE FINISHED PRODUCT MAY DIFFER SLIGHTLY FROM DRAWING.

AGILE Sign & Lighting Maintenance Inc.
35280 LAKELAND BLVD.
EASTLAKE, OHIO 44095
www.agilesign.com
1-440-918-1311
FAX 1-440-918-1411

Customer: HARRY BUFFALO	Date: 1-11-22 rev. 3-26-24	Sq. Ft. 60	Notes:	THIS DRAWING AND IT'S CONTENTS ARE PROPERTY OF AGILE SIGNS, DUPLICATION OF ANY KIND IS PROHIBITED AND PUNISHABLE BY LAW.
Address: 18605 DETROIT AVE., LAKEWOOD, OHIO	Sign/Type: S/F EMC WALL SIGN	Page #		Signature/Approval: X Date:

RECEIVED
By Kelly McCafferty at 2:57 pm, Apr 01, 2024

Case #: S24-000017

Building Permit Application

City of Lakewood Division of Housing and Building

12650 DETROIT AVENUE • LAKEWOOD, OH 44107 • (216) 529-6270 • Fax: (216) 529-5930
building.permits@lakewoodoh.net

PROJECT ADDRESS: 18605 Detroit Road **Suite/Unit #**

or **PERMANENT PARCEL NUMBER:** 31118089

PROPERTY CLASSIFICATION: ☐ 1, 2 or 3 Family OR ☒ Commercial (*includes multifamily and condominiums*)

Who is performing the work? ☐ Homeowner OR ☒ Contractor

PERMIT TYPE: ☒ Building ☐ *Plumbing ☐ *Mechanical ☐ *Electrical *(complete reverse side)*

RELATED CASES: ☐ Correction Notice ☐ Plan Review ☐ A.B.R. Approval Case Number:

SCOPE OF PERMIT *(Check all that apply)*:

☐ New Primary Structure ☐ Addition ☐ Alteration ☐ Repair ☐ Equip. Replacement ☒ Commercial Sign
☐ Tent or Temporary ☐ Rear Deck ☐ Shed ☐ Pool/Hot Tub ☐ Water Controlling ☐ Waterproofing
☐ Commercial Hood ☐ Fire Suppression ☐ Fire Alarm ☐ Storm Sewer ☐ Refrigeration
☐ Demolition ☐ Paving __Drain __No Drain ☐ Fence __ New or __Existing

☐ Other *(Please specify)*: _____

***VALUATION:** *(cost of the work)* $ 1500.00 ***PROJECT SIZE:** *(in square feet)* 601

BRIEF DESCRIPTION OF WORK: (Include scope, dimension, location)

DRAIN IN WORKSPACE (☐ NEW ☐ REPLACEMENT ☐ EXISTING)

Remove existing 3' x 12' SS illuminated cabinet and install 6'5" x 10'3" electronic message center.

PROPERTY OWNER NAME: Thomas George *Phone: 216-952-6116
Business Name (if applicable) Lakewood West End LLC *Email: TgeorgeG@georgegroupcorp.com
Mailing Address: 26202 Detroit Rd. City: Westlake State: OH Zip: 44145
CONTRACTOR CO. NAME: Agile Sign & Lighting Inc. *Phone: 440 749 7724
CONTRACTOR NAME: Iliana Kazanzhi *Email: iliana@agilesign.com
Mailing Address: 35280 Lakeland Blvd City: Eastlake State: OH Zip: 44095
ARCHITECT/ENGINEER: Phone:
Mailing Address: City: State: Zip:

I hereby certify all information contained in this application is true, accurate and complete to the best of my knowledge. Furthermore, I am the property owner of record; or an authorized representative of the contractor registered with the city of Lakewood listed above and authorized by the property owner to perform the work described. I am primarily responsible for the work described and agree to abide by the applicable provisions of law and building codes adopted by the state of Ohio and the City of Lakewood. All subcontractors working under my direction shall be registered with the City of Lakewood. Perpetuation of fraud or misrepresentation including contractors or property owners obtaining permits on behalf of an unregistered contractor is a violation of LCO §1306.69 and punishable by fines, jail time and revocation of contractor registration.

SIGNATURE OF CONTRACTOR / OWNER — DATE: 4/1/24 — **Anticipated Completion Date:** ASAP

Rev.: 10/24/2022

MAIN (216) 529-6270
FAX (216) 529-5930
building.permits@lakewoodoh.gov
www.lakewoodoh.gov

DIVISION OF HOUSING AND BUILDING
12650 DETROIT AVENUE • LAKEWOOD, OHIO 44107

APPLICATION FOR COMMERCIAL PLAN APPROVAL

(For projects subject to the provisions of the Ohio Building Code Section 107.2)

ALL INFORMATION MUST BE PROVIDED AND LEGIBLE

Project Location [OBC 107.2-2]:

Street Address: 18605 Detroit Road.
Floor Number: _____ Suite: _____
Is this building in the floodplain? ☐ Yes ☒ No

Project Information [OBC 107.2-1]:
(Project Use and Occupancy [OBC 107.2-3])

Project Type (check all that apply):
☐ New Building ☐ Alteration ☐ Addition ☐ Repair
☐ Fence, pool, paving, landscaping, shed, tent, other ☒ Sign

Project Scope (check all that apply):
☐ Demolition ☐ General Building ☐ Mechanical (HVAC)
☐ Electrical ☐ Plumbing ☐ Fire Protection (see below)
☐ Site Work over 8,000 sq. ft.

Describe the (proposed) use (e.g.: Restaurant, boutique, office, etc.):
Restaurant

Occupancy class [OBC Chapter 3]:
If Mixed Use [OBC 508.1] **check one**:
☐ Separated ☐ Non-separated ☐ Accessory only

Construction Type [OBC Chapter 6]:

Total Project Work Area: 60' **Sq. Ft.**

Total cost of construction (valuation): $ 1500.00

Describe the project:
Remove existing single sided 3'x12' cabinet and install new 6'5" x 10'3" electronic message center

Fire Protection Systems [OBC 106.1.1.1]

(Indicate all that apply as "E" for Existing, "N" for New, or **NA** if none)

Building Sprinkler System____ Limited Area Sprinkler System _____
In-Rack Sprinkler System____ Demand at Riser Base_____psi
Kitchen Hood Suppression____ Fire Alarm System_____ Fire Detection System_____ Smoke Detection System _____

Required Construction Documents [OBC Section 106]

3 sets required for Building Department plus
1 set for Fire Department Review (if applicable)
1 (Civil) set for Engineering Review (if applicable)
Date on Plans: 4-1-24

Applicant Information [OBC 107.2-5]
(Building Owner or Representative)

Name: Iliana Kazandziev
Business Name: Agile Sign & Light Maint.
Mailing Address: 35280 Lakeland Blvd
City/State/Zip Code: Eastlake, OH 44095
Phone Number: 440-749-7724
Email Address: iliana@Agilesign.com

Registered Design Professional [OBC 106.2.1]

☐ Architect ☐ Engineer
☐ Certified Fire Protection System Designer ☒ NA

Name: _____
Firm or Business: _____
Certificate or Registration Number: _____

Mailing Address: _____
City/State/Zip Code: _____
Contact Name: _____
Contact Phone: _____
Email Address: _____

Certification [OBC 107.2.5]

I certify that I am the building ☐ Owner ☒ Owner's Authorized Agent

All information provided on this application is true, accurate and complete to the best of my knowledge. All official correspondence in connection with this application should be sent to my attention at the mailing address above. I consent to these plans being reviewed in the order of plans examination determined by the building official.

Signature: _____
Printed Name: Iliana Kazandziev
Date of Application: 4-1-24

For Building Department Use

Case Number: S24-000017
Date Received: _____
Received By: _____

Other Approvals Required (prior to permit issuance):
Fire Marshall: ☐ Yes ☐ No ☐ N/A
Engineering: ☐ Yes ☐ No ☐ N/A
ABR/Planning/Zoning: ☐ Yes ☐ No ☐ N/A
Plan Review Fees
Outside Plans Examiner: $_____
Stormwater Review: $_____

From: building.permits@lakewoodoh.gov
Sent: 04/08/2024 - 11:55 AM
To: ilianak@agilesign.com
CC: Kevin.Kelley@lakewoodoh.gov
Subject: Approval Certificate Email Correspondence

Attachments:
S24-000017 - Plans with markups.pdf
PL-Approval Certificate-OBC.htm
Permit Number: S24-000017

Attached are your approved plans and certificate of plan approval. Your permit will be on hold until approval is granted by ABR Sign Review Board.

BOARD OF BUILDING STANDARDS
ARCHITECTURAL REVIEW BOARD
SIGN REVIEW BOARD

12650 Detroit Avenue ● (216) 529-6630 ● FAX (216) 529-5907 ● www.lakewoodoh.gov

Application Cover Page

Docket No.: 05-35-24

Permit No.: BBS24-000035

Applicant Name: Jim Briola, North Coast Sign and Lighting Services Inc.

Project Address: 12215 Clifton Blvd.

Project Name: AIY Properties

Project: Applicant proposes a non-illuminated monument sign.

April 4, 2024

RE: AIY Leasing Office 12215 Clifton Blvd., Lakewood, OH 44107

AIY Properties, Inc.
2 Summit Park Drive #645
Independence, OH 44131

To Whom It May Concern:

This letter is to confirm that **Belvidere Newton Apartments II, LLC**, Owner of the above referenced location, and operating with **AIY Properties, Inc.**, authorizes North Coast Sign and Lighting Services Inc. to make application for any applications and approvals necessary with the City/Municipality in which the above listed Premises resides, for the installation of signage on the Premises.

If you should have any questions regarding this matter please contact:
Tony DiCillo at 440.862.4631 tdicillo@aiyproperties.com

Thank you for your cooperation to this matter.

Very Truly Yours,

Signature

4/4/2024
Date

Tony DiCillo, Marketing & Systems Manager

April 4, 2024

RE: 7006 Detroit Road Apartments at 7006 Detroit Ave., Cleveland, OH 44102

AIY Properties, Inc.
2 Summit Park Drive #645
Independence, OH 44131

To Whom It May Concern:

This letter is to confirm that **7006 Detroit Road, LLC**, Owner of the above referenced location, and operating with **AIY Properties, Inc.**, authorizes North Coast Sign and Lighting Services Inc. to make application for any applications and approvals necessary with the City/Municipality in which the above listed Premises resides, for the installation of signage on the Premises.

If you should have any questions regarding this matter please contact:
Tony DiCillo at 440.862.4631 tdicillo@aiyproperties.com

Thank you for your cooperation to this matter.

Very Truly Yours,

Signature

4/4/2024
Date

Tony DiCillo, Marketing & Systems Manager

PHONE:
330.723.2376
FAX:
330 722.2843
NICK OR JIM
@SIGNANDLIGHT.COM

NORTH COAST
SIGN & LIGHTING
SERVICE INC.

36x24" FACE=6'SQ.

44"(3'8") WIDTH (INC. POSTS)

BACK

JOB: LAKEWOOD LEASING OFFICE
ADDRESS: CLIFTON RD LAKEWOOD
CONTACT: TONY DICILLO
PHONE: 440.862.4631
EMAIL: TDICILLO@AIYPROPERTIES.COM
DATE: 14 MARCH 2024 REV6

NOTES: - NEW CABINET SIGN

ALL DRAWINGS ARE THE PROPERTYOF NORTH COAST SIGN & LIGHTING SERVICES INC. AND ARE TO BE USED FOR CONCEPTUAL PURPOSES ONLY UNTIL SIGNED AND DATED BY PROJECT MANAGER AND CUSTOMER. ANY OTHER USE IS PROHIBITED.

APPROVED DESIGNS MUST BE SIGNED & RETURNED BEFORE PRODUCTION CAN BEGIN
THE COST OF ANY CHANGES AFTER PRODUCTION IS THE RESPONSIBILITY OF THE CUSTOMER (INC. ADDITIONAL TRIPS)

CUSTOMER APPROVAL SIGNATURE: _____

LANDLORD APPROVAL SIGNATURE: _____

PHONE:
330.723.2376
FAX:
330 722.2843
NICK OR JIM
@SIGNANDLIGHT.COM

NORTH COAST
SIGN & LIGHTING
SERVICE INC.

24x18" FACE=3'SQ.

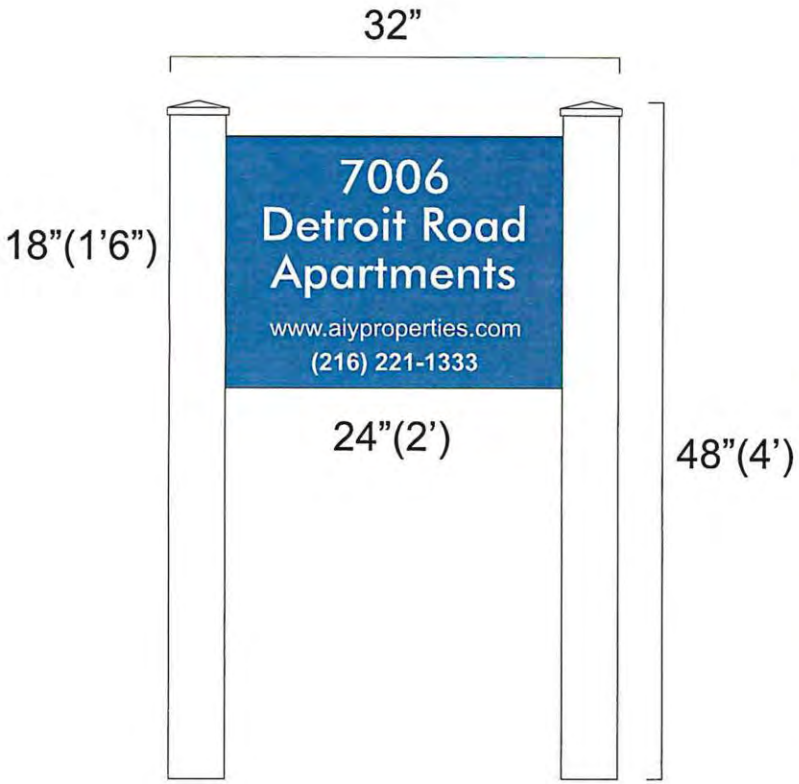

JOB: 7006 DETROIT STREET APARTMENTS
ADDRESS: DETROIT CLEVELAND
CONTACT: TONY DICILLO
PHONE: 440.862.4631
EMAIL: TDICILLO@AIYPROPERTIES.COM
DATE: 8 MARCH 2024 REV2

NOTES: - NEW POST AND PANEL SIGN

ROUTED KING COLOR CORE
WHITE/BLUE/WHITE
WITH WELDED ALUMINUM
BACKING FRAME TO AVOID WARPING

ALL DRAWINGS ARE THE PROPERTYOF NORTH COAST SIGN & LIGHTING SERVICES INC. AND ARE TO BE USED FOR CONCEPTUAL PURPOSES ONLY UNTIL SIGNED AND DATED BY PROJECT MANAGER AND CUSTOMER. ANY OTHER USE IS PROHIBITED.

APPROVED DESIGNS MUST BE SIGNED & RETURNED BEFORE PRODUCTION CAN BEGIN
THE COST OF ANY CHANGES AFTER PRODUCTION IS THE RESPONSIBILITY OF THE CUSTOMER (INC. ADDITIONAL TRIPS)

CUSTOMER APPROVAL SIGNATURE: _____

LANDLORD APPROVAL SIGNATURE: _____

Google Maps 12215 Clifton Blvd

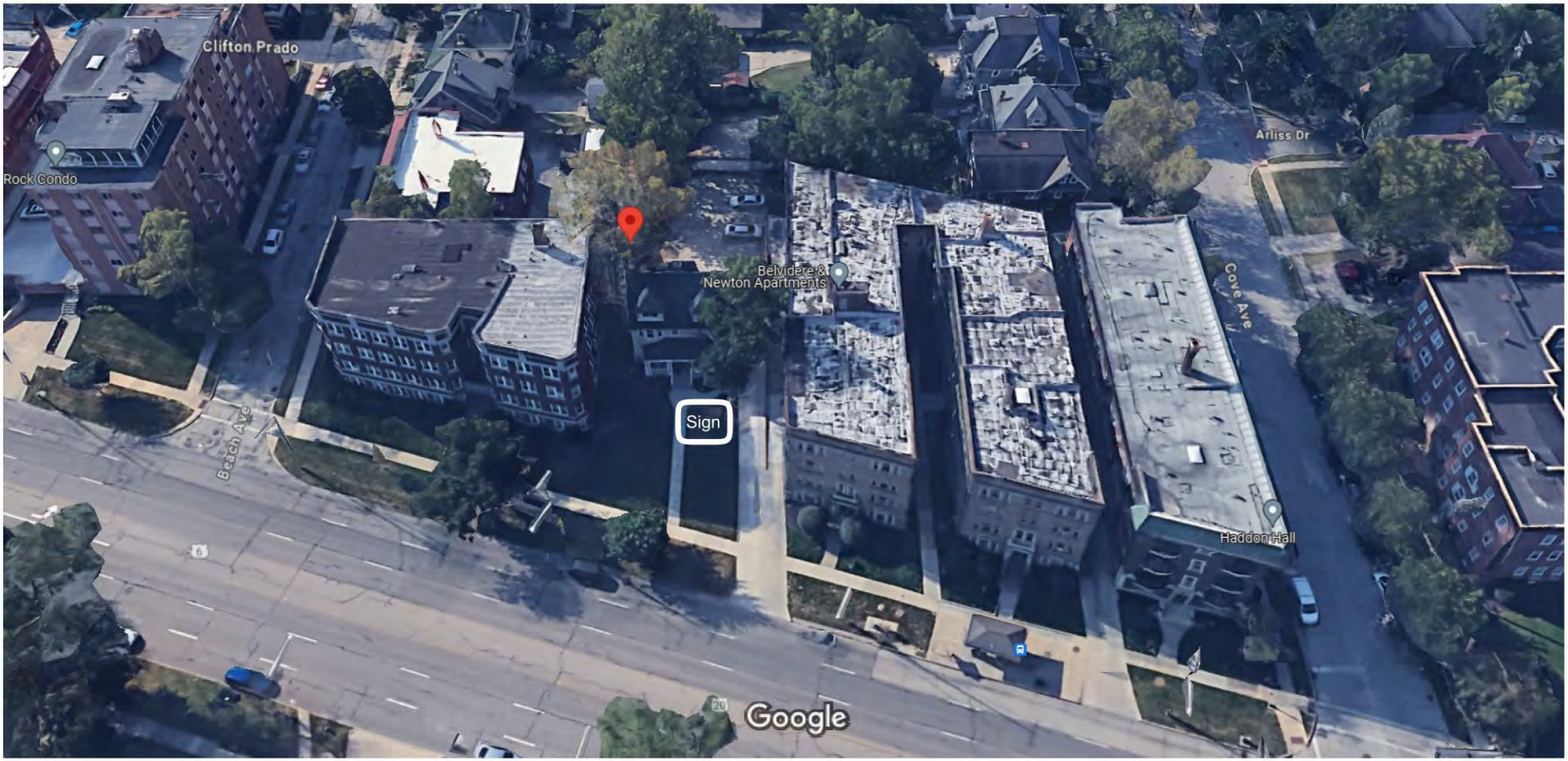

Imagery ©2024 Google, Imagery ©2024 CNES / Airbus, Maxar Technologies, Map data ©2024 20 ft

AIY Properties Leasing Office
12215 Clifton Boulevard
Lakewood, OH 44107

EXISTING CONDITION

AIY Properties Leasing Office
12215 Clifton Boulevard
Lakewood, OH 44107

Image capture: Aug 2022 © 2024 Google Terms Privacy

Case #:

City of Lakewood Division of Housing and Building

12650 DETROIT AVENUE ● LAKEWOOD, OH 44107 ● (216) 529-6270 ● Fax: (216) 529-5930

Building.permits@lakewoodoh.net

Building Permit Application

PROJECT ADDRESS: 12215 Clifton Blvd, Lakewood, OH 44107 Suite/Unit #

or **PERMANENT PARCEL NUMBER:** 312-29-028

PROPERTY CLASSIFICATION: ☐ 1, 2 or 3 Family OR ☑ Commercial (*includes multifamily and condominiums*)

USE DESCRIPTION: *(1-Family, Retail, Restaurant, etc.)* Retail ☐ Change of Use?

PERMIT TYPE: ☑ Building ☐ ***Plumbing** ☐ ***Mechanical** ☐ ***Electrical** ***(complete reverse side)***

RELATED CASES: ☐ Correction Notice ☐ Plan Review ☑ A.B.R. Approval Case Number:

SCOPE OF PERMIT *(Check all that apply)*:

☐ New Primary Structure ☐ Addition ☐ Alteration ☐ Repair ☐ Equip. Replacement ☑ Commercial Sign

☐ Tent or Temporary ☐ Rear Deck ☐ Shed ☐ Pool ☐ Water Controlling ☐ Waterproofing

☐ Commercial Hood ☐ Fire Suppression ☐ Fire Alarm ☐ Storm Sewer ☐ Refrigeration

☐ Demolition ☐ Paving ☐ Fence __ New or __Existing ☐ Other *(Please specify)*: _____

VALUATION:** ***(cost of the work) $ **PROJECT SIZE:** *(in square feet)* 6' SQ.

BRIEF DESCRIPTION OF WORK: (Include scope, dimension, location) _____ **DRAIN**_____ **NO DRAIN**

Install (1) D/F aluminum sign cabinet with aluminum posts, illuminated with an externall floodlight.

PROPERTY OWNER NAME: Phone: 216-221-1333

Business Name (if applicable) AIY Properties Leasing Office Email: tdicillo@aiyproperties.com

Mailing Address: 12215 Clifton Blvd. City: Lakewood State: OH Zip: 44107

CONTRACTOR NAME: North Coast Sign and Lighting Services Inc. Phone: 330-723-2376

License/Reg. No.: Email: jim@signandlight.com

Mailing Address: 310 N. Broadway St. City: Medina State: OH Zip: 44256

ARCHITECT/ENGINEER: Phone:

Mailing Address: City: State: Zip:

I hereby certify all information contained in this application is true, accurate and complete to the best of my knowledge. Furthermore, I am the property owner of record; or an authorized representative of the contractor registered with the city of Lakewood listed above and authorized by the property owner to perform the work described. I am primarily responsible for the work described and agree to abide by the applicable provisions of law and building codes adopted by the state of Ohio and the City of Lakewood. All subcontractors working under my direction shall be registered with the City of Lakewood. Perpetuation of fraud or misrepresentation including contractors or property owners obtaining permits on behalf of an unregistered contractor is a violation of LCO §1306.69 and punishable by fines, jail time and revocation of contractor registration.

_____ _____ **Anticipated Completion Date:** _____

SIGNATURE OF CONTRACTOR / OWNER **DATE**

Rev.: 05/27/2020

ELECTRICAL PERMIT

Items	Qty	Cost per	Extended cost
Base Fee		**$30.00**	**$30.00**
Each 120 volt receptacle		3.00	
Each fixture outlet		3.00	
Each outlet or receptacle in excess of 120 volts		12.00	
Motors (each unit): 1/4 HP or less		10.00	
1/3 hp to and including 3/4 HP		15.00	
7/8 HP to and including 5 HP		20.00	
Over 5 HP		25.00	
X-ray machines or equipment		50.00	
Corrections or Alterations		20.00	
Panel, services, related equipment, and disconnects		50.00	
Low voltage smoke and/or fire alarm systems		50.00	
Residential State Fee add 1% - Commercial State Fee add 3%	**1%**	**3%**	
Subcontractor Name:		**Total**	$

PLUMBING PERMIT

Items	Qty	Cost per	Extended cost
Base Fee		**$30.00**	**$30.00**
Lavatories, sinks, laundry trays, bath tubs, showers, standpipes, combination fixtures, urinals, water closets, floor drains, area drains, yard drains, refrigerator drains, dishwashers, sterilizers, dental chairs, water filters, ejector, sump pumps, garbage grinders, grease interceptor, and each three feet or fraction thereof of gang shower length, per each unit		3.00	
Gas Piping: For each outlet		5.00	
Each indoor sprinkler head		5.00	
Each outdoor sprinkler head		2.00	
Each inside leader		3.00	
Each air admittance valve		10.00	
Hot water storage tanks: Up to and including 150 gallon capacity		5.00	
151 gallon and up to and including 300 gallon capacity		8.00	
301 gallon and more		10.00	
Each drain or sewer per 100 feet of aggregate length or part thereof according to diameter:			
Up to and including 6 inches in diameter		10.00	
8 inch diameter		15.00	
10 inch diameter		20.00	
12 inch diameter		25.00	
Potable water piping per 100 feet of aggregate length or part thereof (excluding service line governed by Water Dept.)		10.00	
Residential State Fee add 1% - Commercial State Fee add 3%	**1%**	**3%**	
Subcontractor Name:		**Total**	$

HVAC PERMIT

Unit	Qty	Make	Model	BTU's/Tons of Cooling	Type of Fuel	New or Replacement
Warm Air Furnace						☐ New ☐ Replacement
Boiler						☐ New ☐ Replacement
Unit Heater						☐ New ☐ Replacement
Heat Pump						☐ New ☐ Replacement
Air Conditioner						☐ New ☐ Replacement

***Will the A/C be placed in the side yard?** YES or NO ***If YES**, please attach A/C side yard placement worksheet.

Solar						☐ New ☐ Replacement
Other						☐ New ☐ Replacement

If new whole house A/C, cost is: $ _____ **Increase in heating BTU's:** _____

Add $40.00 Base Fee			**$40.00**
Residential State Fee add 1% - Commercial State Fee add 3%	**1%**	**3%**	$
Subcontractor Name:		**Total**	**$**

Rev.: 05/27/2020

CHRISTOPHER S. PARMELEE
BUILDING COMMISSIONER
216/529-6295

WILLIAM WAGNER
ASSISTANT BUILDING COMMISSIONER
216/529-6284

MARK D. JEWITT
PROPERTY MAINTENANCE SUPERVISOR
216/529-6291

DIVISION OF HOUSING AND BUILDING
12650 DETROIT AVENUE • LAKEWOOD, OHIO 44107 • 216/529-6270 •FAX 216/529-5930
Website: www.lakewoodoh.gov

CERTIFICATE OF PLAN APPROVAL
APPLICATION NUMBER: S24-000018

Project Address	12215 CLIFTON BLVD
Parcel Number	31229028
Project Description	"AIY Properties" - Install 1 aluminium sign with aluminum posts as per plans.
Use Group	R2
Construction Type	IIIB
Approval Date	April 09, 2024
Drawings Dated	04/03/2024
Submittal Code Cycle	2024 OBC, 2024 OMC, 2024 OPC, 2023 NEC, 2021 IECC, 2009 & 2017 ICC-A117

OWNER

BELVIDERE NEWTON APARTMENTS II LLC
322 WINDHAM CT
BROADVIEW HEIGHTS, OH 44147

Conditions of Approval

1. ***This is your certificate of plan approval and not your permit to erect, or install the signs. The permit will be on hold until ABR Sign Review Board has approved the signage.***

This is to certify that the submitted construction documents are approved in conformance with Section 105 OBC, subject to the conditions specified above.

Christopher Parmelee
Building Commissioner

City of Lakewood
12650 Detroit Avenue
Lakewood, OH 44107-2832
216.529.6295 (Phone)
216.529.5930 (Fax)
Email: Christopher.Parmelee@lakewoodoh.net

This certificate and one set of approved drawings, manufacturers' installation instructions and product information shall be kept at the work site and available for use by inspectors.

If work specified in this plan approval is not commenced within twelve (12) months of the approval date it shall expire. One extension shall be granted for an additional twelve-month period if requested by the owner in writing at least ten days in advance of the expiration of the approval.

If substantive changes to the building are contemplated during construction, those changes must be submitted to the Building Official for review and approval prior to those changes being executed.

THIS DOCUMENT IS ONLY TO CERTIFY APPROVAL OF THE CONSTRUCTION DOCUMENTS IN CONFORMANCE WITH THE OHIO BUILDING CODE AND IS NOT A PERMIT TO START WORK. PERMITS MUST BE OBTAINED IN CONFORMANCE WITH THE CITY OF LAKEWOOD CODIFIED ORDINANCES.

DIVISION OF HOUSING AND BUILDING
12650 DETROIT AVENUE - LAKEWOOD, OHIO 44107

MAIN (216) 529-6270
FAX (216) 529-5930
building.permits@lakewoodoh.net
www.lakewoodoh.gov

APPLICATION FOR COMMERCIAL PLAN APPROVAL

(For projects subject to the provisions of the Ohio Building Code Section 107.2)

ALL INFORMATION MUST BE PROVIDED AND LEGIBLE

Project Location [OBC 107.2-2]:

Street Address: 12215 Clifton Blvd, Lakewood, OH 44107
Floor Number: _____ Suite: _____
Is this building in the floodplain? ☐ Yes ☐ No

Project Information [OBC 107.2-1]:
(Project Use and Occupancy [OBC 107.2-3])

Project Type (check all that apply):
☐ New Building ☐ Alteration ☐ Addition ☐ Repair
☐ Fence, pool, paving, landscaping, shed, tent, other ☑ Sign

Project Scope (check all that apply):
☐ Demolition ☐ General Building ☐ Mechanical (HVAC)
☐ Electrical ☐ Plumbing ☐ Fire Protection (see below)
☐ Site Work over 8,000 sq. ft.

Describe the (proposed) use (e.g.: Restaurant, boutique, office, etc.)
Leasing Office

Occupancy class [OBC Chapter 3]: _____
If Mixed Use [OBC 508.1] **check one**:
☐ Separated ☐ Non-separated ☐ Accessory only

Construction Type [OBC Chapter 6]: Sign

Total Project Work Area: 8 **Sq. Ft.**

Total cost of construction (valuation): $ 4,500.00

Describe the project:
Install (1) 3' H x 3' W D/F aluminum post and panel sign in front of leasing office

Fire Protection Systems [OBC 106.1.1.1]

(Indicate all that apply as "**E**" for Existing, "**N**" for New, or **NA** if none)

Building Sprinkler System ___ Limited Area Sprinkler System ___
In-Rack Sprinkler System ___ Demand at Riser Base _____ psi
Kitchen Hood Suppression ___ Fire Alarm System _____
Fire Detection System ___ Smoke Detection System _____

Required Construction Documents [OBC Section 106]

3 sets required for Building Department plus
1 set for Fire Department Review (if applicable)
1 (Civil) set for Engineering Review (if applicable)
Date on Plans: _____

Applicant Information [OBC 107.2-5]
(Building Owner or Representative)

Name: James P. Briola
Business Name: North Coast Sign and Lighting Services Inc.
Mailing Address: 310 N. Broadway St
City/State/Zip Code: Medina, OH 44256
Phone Number: (330) 723-2376
For Best Service Provide Email Address:
jm@signandlight.com

Registered Design Professional [OBC 106.2.1]

☐ Architect ☐ Engineer
☐ Certified Fire Protection System Designer ☐ NA

Name: _____
Firm or Business: _____
Certificate or Registration Number: _____

Mailing Address: _____
City/State/Zip Code: _____
Contact Name: _____
Contact Phone: _____
For Best Service Provide Email Address:

Certification [OBC 107.2.5]

I certify that I am the building ☐ Owner ☑ Owner's Authorized Agent

All information provided on this application is true, accurate and complete to the best of my knowledge. All official correspondence in connection with this application should be sent to my attention at the mailing address above. I consent to these plans being reviewed in the order of plans examination determined by the building official.

Signature: James P. Briola
Printed Name: James P. Briola
Date of Application: 04/03/2024

For Building Department Use

Case Number: _____
Date Received: _____
Received By: _____

Other Approvals Required (prior to permit issuance):
Fire Marshall: ☐ Yes ☐ No ☐ NA
Engineering ☐ Yes ☐ No ☐ NA
ABR/Planning/Zoning ☐ Yes ☐ No ☐ NA

Plan Review Fees
Outside Plans Examiner $_____
Stormwater Review: $_____

From: building.permits@lakewoodoh.gov
Sent: 04/09/2024 - 10:11 AM
To: jim@signandlight.com
CC: Goran.Najdenovski@lakewoodoh.net
Subject: Approval Certificate Email Correspondence

Attachments:
S24-000018 - Plans with markups.pdf
PL-Approval Certificate-OBC.htm
Permit Number: S24-000018

Attached is your approved sign plans and certificate of plan approval. This is not your permit. Your permit will be on hold until approval is granted by ABR Sign Approval Board.

BOARD OF BUILDING STANDARDS
ARCHITECTURAL REVIEW BOARD
SIGN REVIEW BOARD

12650 Detroit Avenue ● (216) 529-6630 ● FAX (216) 529-5907 ● www.lakewoodoh.gov

Application Cover Page

Docket No.: 05-36-24

Permit No.: BBS24-000038

Applicant Name: Joe Palecek, Advanced Installation & Sign Service

Project Address: 16304 Detroit Ave.

Project Name: Lakewood Bottle Shop

Project: Applicant proposes an internally-illuminated double-sided blade sign.

To Whom it may concern,

I Frank Scalish

Grant permission to Advanced Installation and Sign Service to act on our behalf in meetings and install signage on the said property below.

Property:

16300 Detroit Avenue Unit 110

Owner/Landlord Contact Information:

Name The Trinity Project LLC

Address 13316 Madison Ave Lakewood OH 44107

Contact/Email frank.scalish@scalishconstruction.com

Signature

LAKEWOOD BOTTLE SHOP

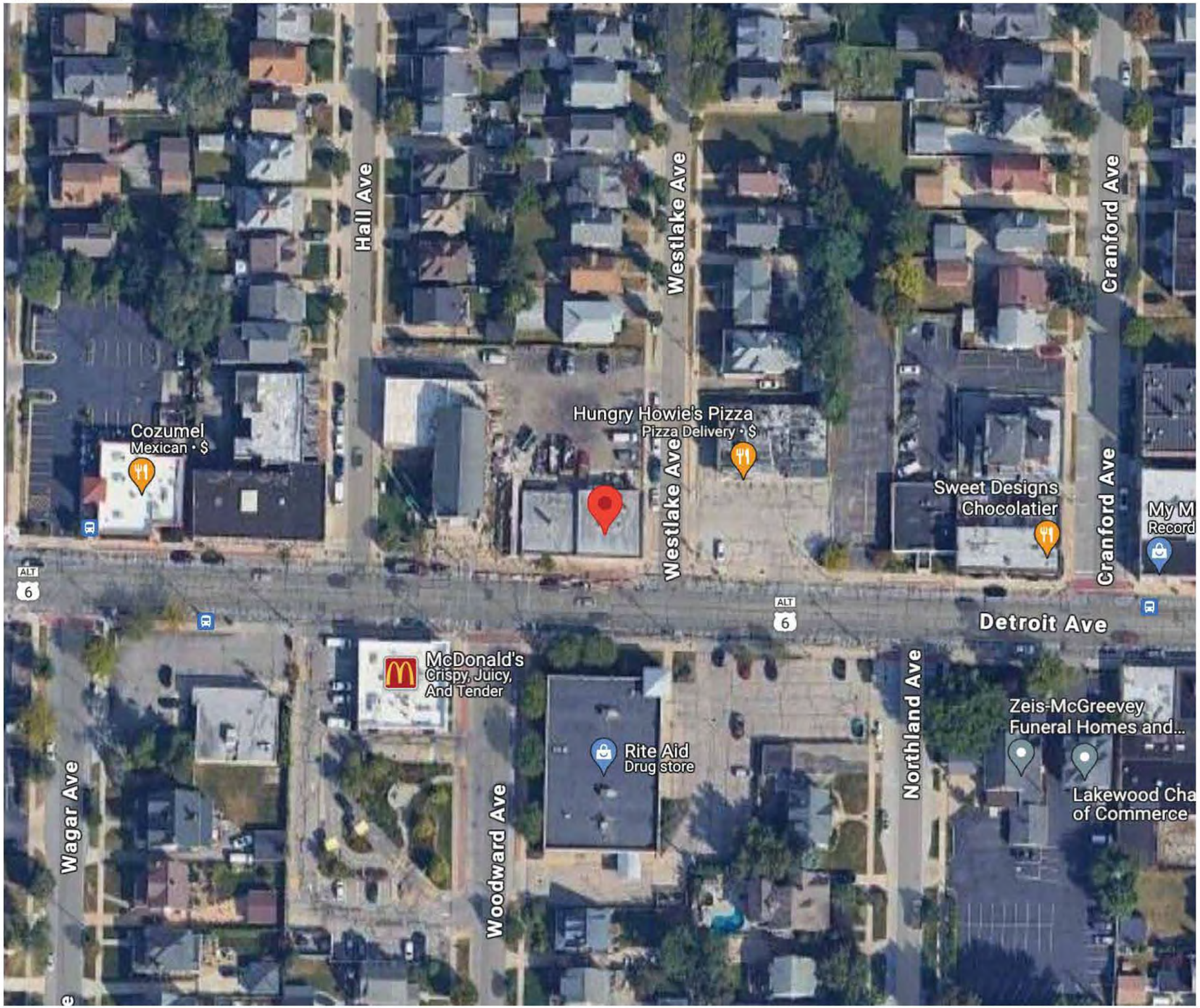

SCOPE OF PROJECT

i. One (1) double-sided illuminated blade sign

i.

Lakewood BOTTLE SHOP

RECEIVED
By Mike Reilley at 7:41 am, Apr 16, 2024

S24-000021

City of Lakewood
Approved Plans
S24-000021
Christopher Parmelee
04/18/2024

COLORS

White

CMYK
83, 73, 42, 32

CMYK
100, 87, 42, 53

CMYK
43, 69, 36, 8

CMYK
58, 80, 57, 64

Black

***ALL MEASUREMENTS & MATERIALS ARE APPROXIMATE FOR PURPOSES OF VISUALIZATION, AND ARE SUBJECT TO CHANGE IF NECESSARY.**

These drawings are the exclusive property of Ellen Benjamin. They represent chargeable time spent. They are submitted for your personal use under the agreement that the use of this design in its entirety or any part will not be reproduced, copied, lent or used for any purpose without written consent fromEllen Benjamin.

LAKEWOOD BOTTLE SHOP 16300 DETROIT AVE, #110, LAKEWOOD, OH 44107	VERSIONS V1: 03/14/24 V2: 03/26/24	DATE 03/26/24	PROJECT MANAGER ANNA A.	PAGE DESCRIPTION LOCATION & SCOPE	PAGE NO. 1 OF 6

MATERIALS

CABINET: 6” aluminum fabrication, painted black

FACES: 3/16” #2447 white acrylic w/ trim cap & vinyl graphics

TRIM CAP: 1” or 2” black

GRAPHICS: Digitally-printed translucent vinyl to match brand colors

LIGHTING: Internally-illuminated with 7500K white LEDs & 12V internal power supplies (*location of power supplies to be confirmed by installer; power to be brought within 6 ft of sign by customer*); UL listed w/ toggle switch

MOUNTING: 2” square horizontal aluminum mounting arm w/ 8“ x 8” x 1/2” aluminum plate, painted black, bolted to fascia through mortar joints with appropriate hardware (*TBD by installer*)

PAINT: Std. black (satin)

COLORS

White	CMYK 43, 69, 36, 8
CMYK 83, 73, 42, 32	CMYK 58, 80, 57, 64
CMYK 100, 87, 42, 53	Black

***ALL MEASUREMENTS & MATERIALS ARE APPROXIMATE FOR PURPOSES OF VISUALIZATION, AND ARE SUBJECT TO CHANGE IF NECESSARY.**

These drawings are the exclusive property of Ellen Benjamin. They represent chargeable time spent. They are submitted for your personal use under the agreement that the use of this design in its entirety or any part will not be reproduced, copied, lent or used for any purpose without written consent fromEllen Benjamin.

LAKEWOOD BOTTLE SHOP
16300 DETROIT AVE, #110, LAKEWOOD, OH 44107

OVERALL DIMENSIONS 4’ - 0” W x 1’ - 8” H x 6” D *(excluding mounting)* SQUARE FOOTAGE 6.7 ft.^{2}	SCALE	DATE	PROJECT MANAGER	PAGE DESCRIPTION	PAGE NO.
	1 : 10	03/26/24	ANNA A.	FRONT/BACK VIEW	2 OF 6

MATERIALS

CABINET: 6” aluminum fabrication, painted black

FACES: 3/16” #2447 white acrylic w/ trim cap & vinyl graphics

TRIM CAP: 1” or 2” black

GRAPHICS: Digitally-printed translucent vinyl to match brand colors

LIGHTING: Internally-illuminated with 7500K white LEDs & 12V internal power supplies (*location of power supplies to be confirmed by installer; power to be brought within 6 ft of sign by customer*); UL listed w/ toggle switch

MOUNTING: 2” square horizontal aluminum mounting arm w/ 8“ x 8” x 1/2” aluminum plate, painted black, bolted to fascia through mortar joints with appropriate hardware (*TBD by installer*)

PAINT: Std. black (satin)

COLORS

White	CMYK 43, 69, 36, 8
CMYK 83, 73, 42, 32	CMYK 58, 80, 57, 64
CMYK 100, 87, 42, 53	Black

DIRECT SIDE VIEW

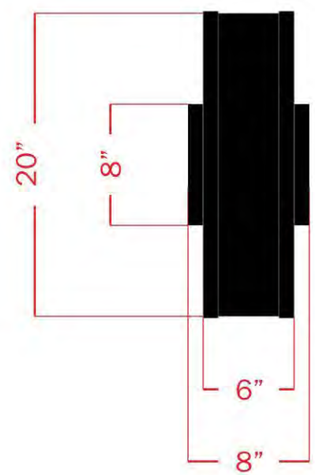

ORTHOGRAPHIC VIEW

***ALL MEASUREMENTS & MATERIALS ARE APPROXIMATE FOR PURPOSES OF VISUALIZATION, AND ARE SUBJECT TO CHANGE IF NECESSARY.**

These drawings are the exclusive property of Ellen Benjamin. They represent chargeable time spent. They are submitted for your personal use under the agreement that the use of this design in its entirety or any part will not be reproduced, copied, lent or used for any purpose without written consent fromEllen Benjamin.

LAKEWOOD BOTTLE SHOP
16300 DETROIT AVE, #110, LAKEWOOD, OH 44107

OVERALL DIMENSIONS *(excluding mounting)*	SCALE	DATE	PROJECT MANAGER	PAGE DESCRIPTION	PAGE NO.
4’ - 0” W x 1’ - 8” H x 6” D SQUARE FOOTAGE 6.7 ft.^{2}	1 : 10	03/26/24	ANNA A.	SIDE VIEWS	3 OF 6

DOUBLE-SIDED ILLUMINATED PROJECTING SIGN (TYPICAL)

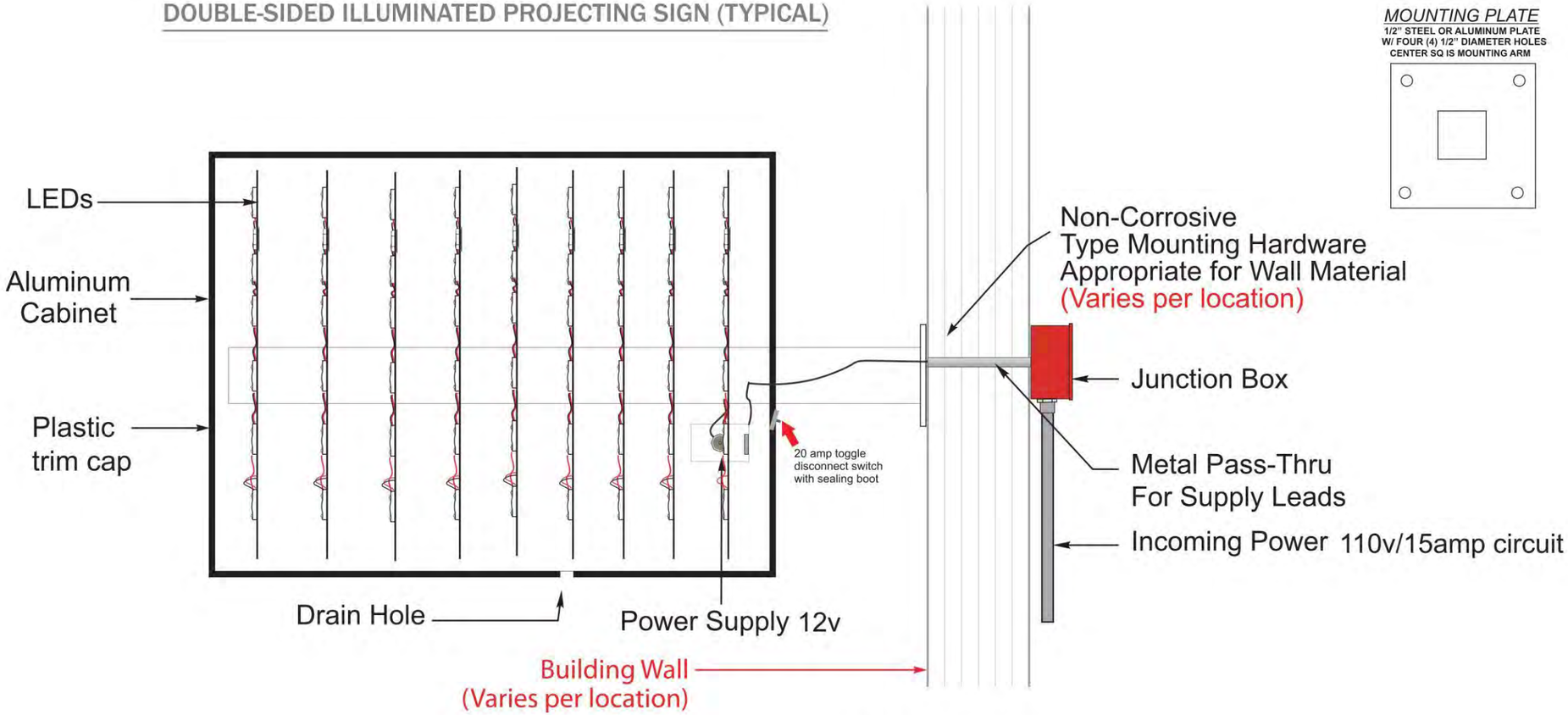

SECTION VIEW
SCALE: NTS

Customer is to provide primary electrical to sign. Power to the sign must be done by a licensed electrical contractor or electrician. Each sign must have a minimum of one (1) dedicated 120V 20A circuit. Junction box must be installed within 6 feet of the sign. Whips provided by sign manufacturer to include three (3) wires: ground, line & neutral.

***ALL MEASUREMENTS & MATERIALS ARE APPROXIMATE FOR PURPOSES OF VISUALIZATION, AND ARE SUBJECT TO CHANGE IF NECESSARY.**

These drawings are the exclusive property of Ellen Benjamin. They represent chargeable time spent. They are submitted for your personal use under the agreement that the use of this design in its entirety or any part will not be reproduced, copied, lent or used for any purpose without written consent fromEllen Benjamin.

LAKEWOOD BOTTLE SHOP 16300 DETROIT AVE, #110, LAKEWOOD, OH 44107	OVERALL DIMENSIONS 4' - 0" W x 1' - 8" H x 6" D *(excluding mounting)* SQUARE FOOTAGE 6.7 ft.^{2}	SCALE NOT TO SCALE	DATE 03/26/24	PROJECT MANAGER ANNA A.	PAGE DESCRIPTION SECTION-THROUGH	PAGE NO. 4 OF 6

MOCK-UP - DAY TIME

*ALL MEASUREMENTS & MATERIALS ARE APPROXIMATE FOR PURPOSES OF VISUALIZATION, AND ARE SUBJECT TO CHANGE IF NECESSARY.

These drawings are the exclusive property of Ellen Benjamin. They represent chargeable time spent. They are submitted for your personal use under the agreement that the use of this design in its entirety or any part will not be reproduced, copied, lent or used for any purpose without written consent from Ellen Benjamin.

LAKEWOOD BOTTLE SHOP 16300 DETROIT AVE, #110, LAKEWOOD, OH 44107	OVERALL DIMENSIONS 4’ - 0” W x 1’ - 8” H x 6” D *(excluding mounting)* SQUARE FOOTAGE 6.7 ft.^{2}	SCALE AS NOTED	DATE 03/26/24	PROJECT MANAGER ANNA A.	PAGE DESCRIPTION MOCK-UP - DAY TIME	PAGE NO. 5 OF 6

MOCK-UP - NIGHT TIME

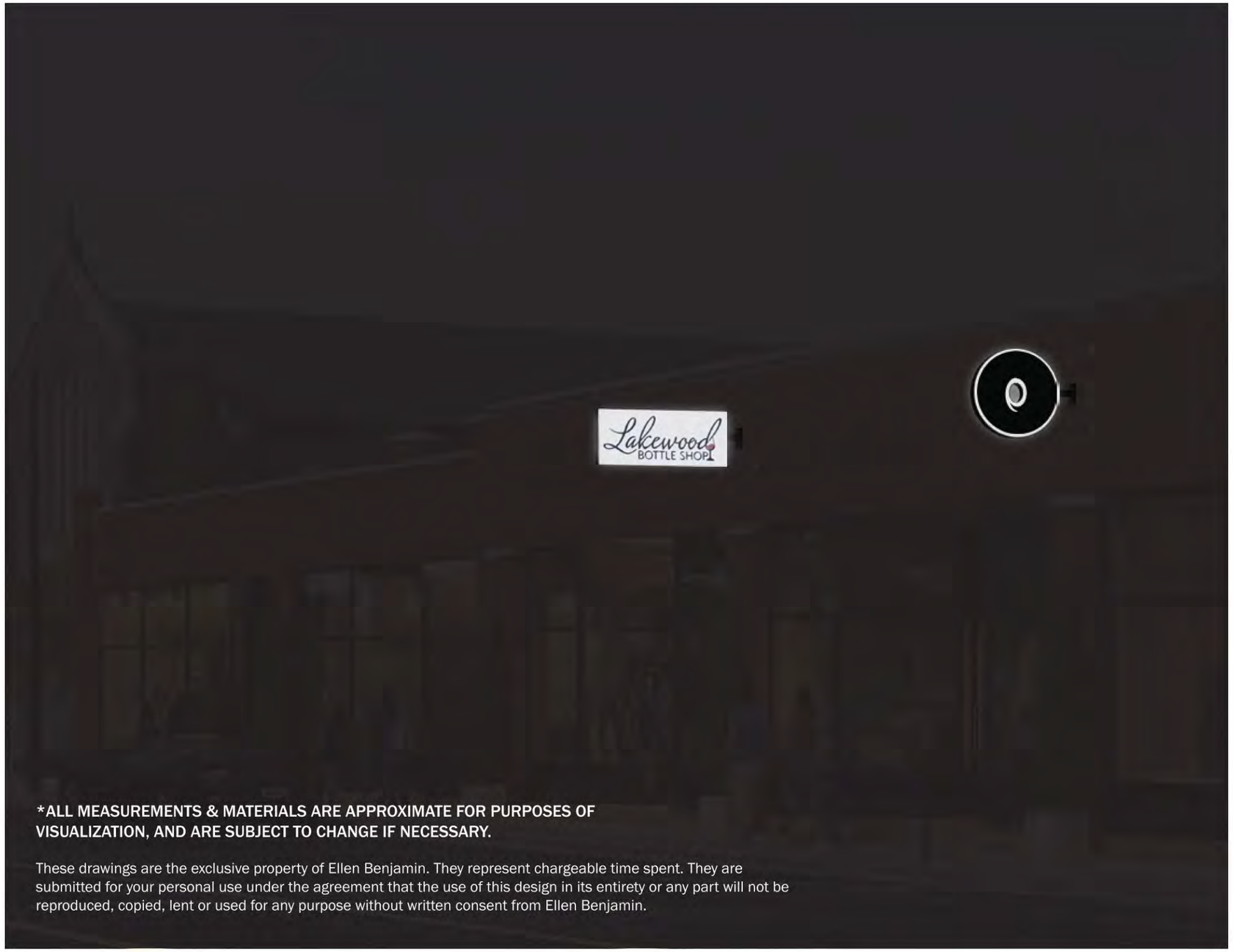

***ALL MEASUREMENTS & MATERIALS ARE APPROXIMATE FOR PURPOSES OF VISUALIZATION, AND ARE SUBJECT TO CHANGE IF NECESSARY.**

These drawings are the exclusive property of Ellen Benjamin. They represent chargeable time spent. They are submitted for your personal use under the agreement that the use of this design in its entirety or any part will not be reproduced, copied, lent or used for any purpose without written consent from Ellen Benjamin.

LAKEWOOD BOTTLE SHOP 16300 DETROIT AVE, #110, LAKEWOOD, OH 44107	OVERALL DIMENSIONS 4' - 0" W x 1' - 8" H x 6" D *(excluding mounting)* SQUARE FOOTAGE 6.7 ft.^{2}	SCALE AS NOTED	DATE 03/26/24	PROJECT MANAGER ANNA A.	PAGE DESCRIPTION MOCK-UP - NIGHT TIME	PAGE NO. 6 OF 6

16300 US-6 ALT

Image capture: Jul 2021 © 2024 Google

BOARD OF BUILDING STANDARDS
ARCHITECTURAL REVIEW BOARD
SIGN REVIEW BOARD

12650 Detroit Avenue ● (216) 529-6630 ● FAX (216) 529-5907 ● www.lakewoodoh.gov

Application Cover Page

Docket No.: 05-37-24

Permit No.: BBS24-000039

Applicant Name: Steven Foster, The Sign & Graphics Firm, LLC

Project Address: 14505 Madison Ave.

Project Name: Barber Lounge Lakewood

Project: Applicant proposes a non-illuminated double-sided blade sign.

Signature of consent

I hereby provide my signature for consent on behalf of the owner and tenant of said property for which I am submitting a sign application for review.

Steve Foster
The Sign & Graphics Firm
(216) 390-0198

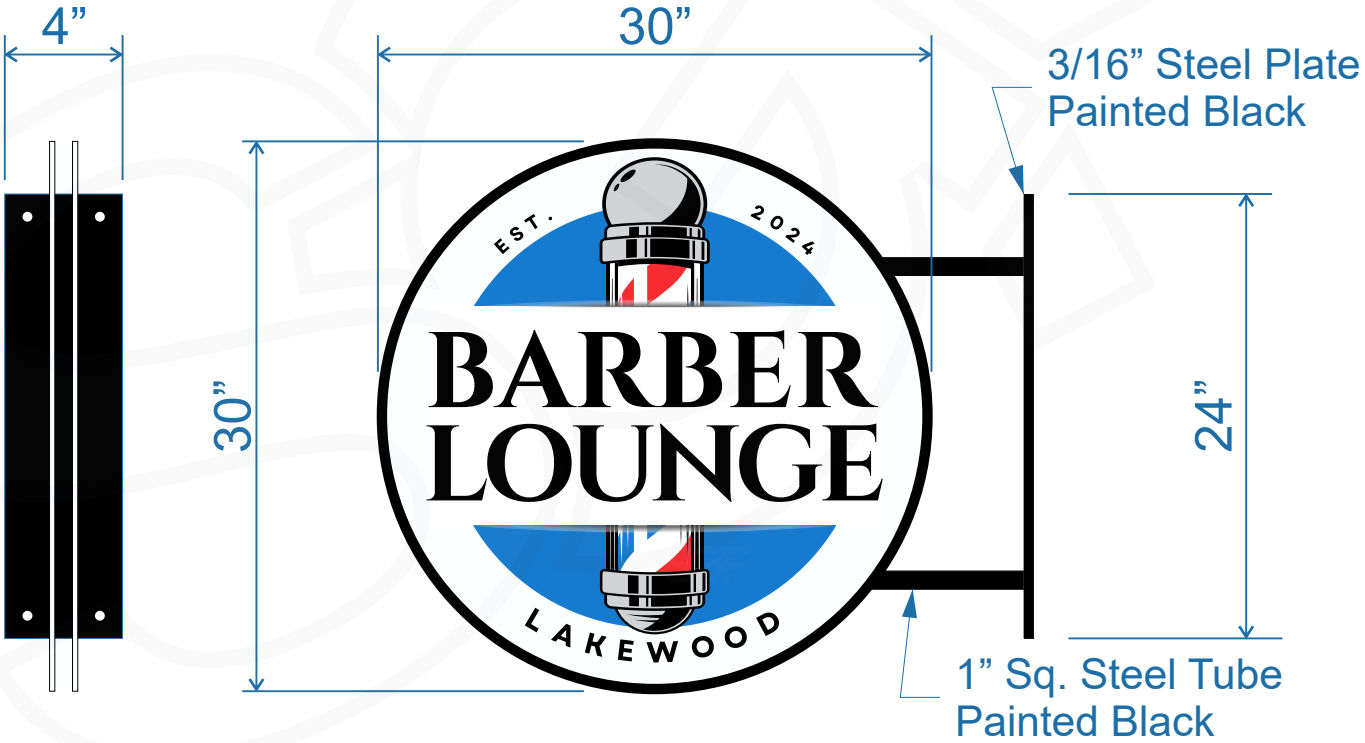

DOUBLE-SIDED BLADE SIGN

(Non-Lit ACM Rounds w/ Vinyl Faces)

This drawing is CONFIDENTIAL and PROPRIETARY. Use without written permission of The Sign & Graphics Firm is strictly prohibited.

***NOTE**: Renderings are approximate representations of final production.*

Steven Foster
216.390.0198
sgfoster09@gmail.com

The SIGN & GRAPHICS FIRM

BUSINESS NAME:
Barber Lounge Lakewood

ADDRESS:
14055 Madison Ave.
Lakewood, OH 44107

1
4-15-24

BOARD OF BUILDING STANDARDS
ARCHITECTURAL REVIEW BOARD
SIGN REVIEW BOARD

12650 Detroit Avenue ● (216) 529-6630 ● FAX (216) 529-5907 ● www.lakewoodoh.gov

Application Cover Page

Docket No.: 05-38-24

Permit No.: BBS24-000040

Applicant Name: Steven Foster, The Sign & Graphics Firm, LLC

Project Address: 15501 Madison Ave.

Project Name: Vital Pilates

Project: Applicant proposes a halo-lit steel stud mounted letters on front of the building.

Signature of consent

I hereby provide my signature for consent on behalf of the owner and tenant of said property for which I am submitting a sign application for review.

Steve Foster
The Sign & Graphics Firm
(216) 390-0198

BEFORE

PROPOSED

Rendering @ Twilight - Back-lit Letters

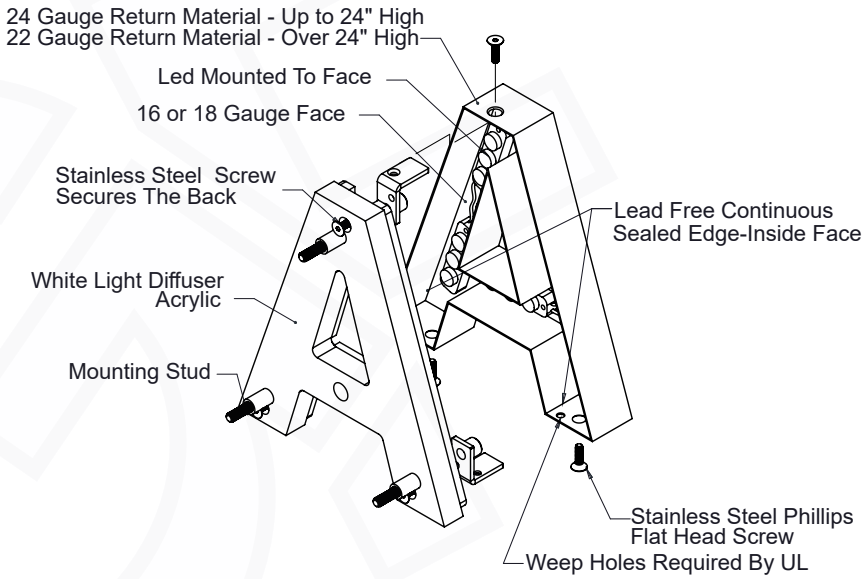

PROPOSED HALO-LIT SIGNAGE

Satin Black Stainless Steel Stud-Mounted Letters

This drawing is CONFIDENTIAL and PROPRIETARY. Use without written permission of The Sign & Graphics Firm is strictly prohibited.

***NOTE**: Renderings are approximate representations of final production.*

1
4-16-24

ADDRESS:
15501 Madison Ave.
Lakewood, OH 44107

BUSINESS NAME:
Vital Pilates & Wellness Bar

Steven Foster
216.390.0198
sgfoster09@gmail.com

The SIGN & GRAPHICS FIRM

BOARD OF BUILDING STANDARDS
ARCHITECTURAL REVIEW BOARD
SIGN REVIEW BOARD

12650 Detroit Avenue ● (216) 529-6630 ● FAX (216) 529-5907 ● www.lakewoodoh.gov

Application Cover Page

Docket No.: 05-39-24

Permit No.: BBS24-000041

Applicant Name: Steven Foster, The Sign & Graphics Firm, LLC

Project Address: 13733 Madison Ave.

Project Name: Doki Doki

Project: Applicant proposes painted 6 mm DiBond sheeting sign board in the sign band.

Signature of consent

I hereby provide my signature for consent on behalf of the owner and tenant of said property for which I am submitting a sign application for review.

Steve Foster
The Sign & Graphics Firm
(216) 390-0198

BEFORE

PROPOSED

Existing Signage
(moved from prev. location)

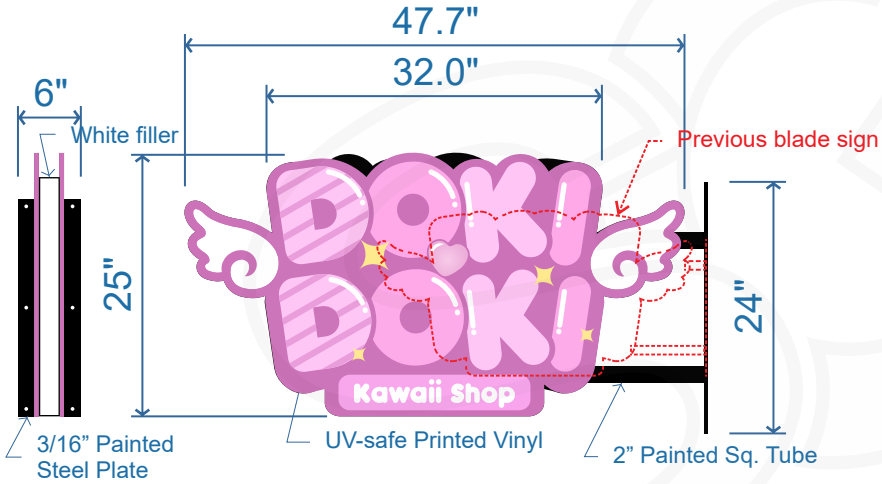

Larger Double-sided 3mm DiBond Blade Sign
(8.28 S.F.)

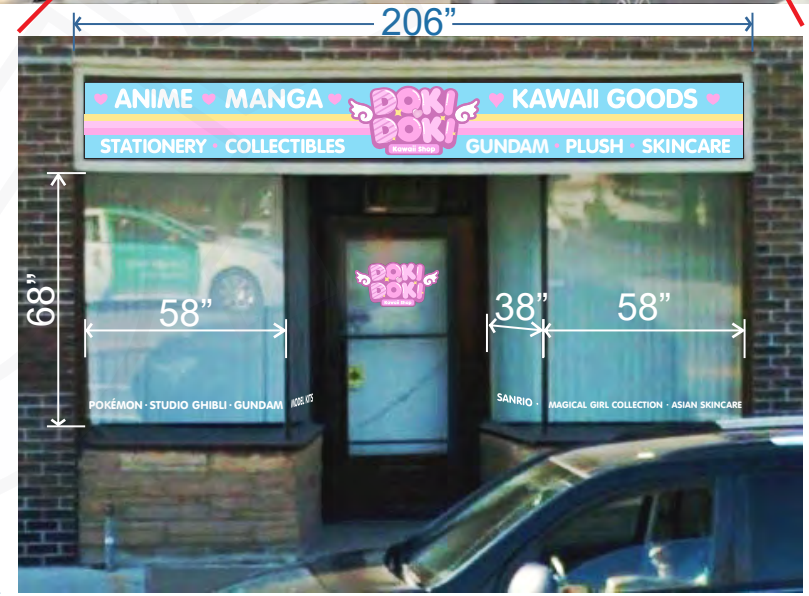

POKÉMON · STUDIO GHIBLI · GUNDAM MODEL KITS SANRIO · MAGICAL GIRL COLLECTION · ASIAN SKINCARE

Window Vinyl 2”
(45.33 S.F. x 2 = 90.66 Glass S.F.)

UV-safe printed vinyl background, letters, and graphics

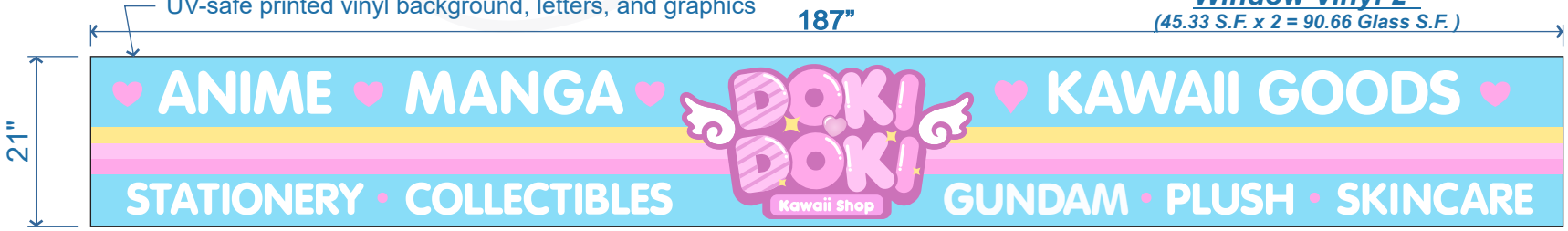

Painted 6mm DiBond Sheeting Sign Board
(27.27 S.F.)

4-21-24: Added Sq. Ft. & storefront dim.
4-25-24: Added storefront dim. for both; updated window vinyl & dims.

This drawing is CONFIDENTIAL and PROPRIETARY. Use without written permission of The Sign & Graphics Firm is strictly prohibited.

NOTE: Renderings are approximate representations of final production.

1
4-25-24

ADDRESS:
13733 Madison Ave.
Lakewood, OH 44107

BUSINESS NAME:
DOKI DOKI

Steven Foster
216.390.0198
sgfoster09@gmail.com

The SIGN & GRAPHICS FIRM

BOARD OF BUILDING STANDARDS
ARCHITECTURAL REVIEW BOARD
SIGN REVIEW BOARD

12650 Detroit Avenue ● (216) 529-6630 ● FAX (216) 529-5907 ● www.lakewoodoh.gov

Application Cover Page

Docket No.: 05-40-24

Permit No.: BBS24-000034

Applicant Name: David T. Maddux, The Arcus Group Inc.

Project Address: 1375 West Clifton Blvd.

Project Name: Lakewood Congregational Church

Project: Applicant proposes a new entrance and railing on the west side of the church.

City of Lakewood

Architectural Review Board

4-19-24

David Maddux of the Arcus Group Inc. has our permission to represent Lakewood Congregational Church at the City of Lakewood Architectural Review Board.

Karen Lee

Lakewood Congregational Church

Plan Notes (X) (NUMBERED IN HEXAGONS)

K1. INSTALL NEW RANGE.
MANUFACTURER: IMPERIAL
MODEL: IR-6-E
(OR APPROVED EQUAL)

K2. INSTALL NEW OVEN.
MANUFACTURER: SOUTHBEND
MODEL: B6S/22SC
(OR APPROVED EQUAL)

K3. INSTALL NEW REFRIGERATOR.
MANUFACTURER: ATOSA USA, Inc.
MODEL: MBF8004GR
(OR APPROVED EQUAL)

K4. REFINISH CABINETS.

K5. NEW CABINETRY.
(SEE INTERIOR DRAWINGS)

K6. REFRIGERATOR BY OWNER

K7. DISHWASHER BY OWNER

K8. SINK (SEE PLUMBING DRAWINGS)

K9. WASHER & DRYER BY OWNER

K10. RESTORE BASE OF EXISTING KITCHEN COUNTER & RELOCATE.

K11. NEW SOFFIT TO MATCH FACE OF BASE CABINETS TO CONCEAL PIPING.

K12. NEW CABINET ON WHEELS

1. NEW PORTABLE STAGE & STEPS BY OWNER.
2. NEW VERTICAL PLATFORM LIFT.
MANUFACTURER: SYMMETRY ELEVATORS
MODEL: VPL037-UL-ST-TL-36x54-FRAMP
(OR APPROVED EQUAL)
3. RELOCATE STORAGE FENCE WALL.
4. EXISTING BRICK PAVERS TO BE REWORKED (210 S.F.), AND CONCRETE WALKWAY ADDED TO EXISTING SIDEWALK (108 S.F.). DONOR BRICKS TO BE RELOCATED OFF PATHWAY.
5. PROVIDE POWERED OPERATOR FOR EXISTING DOORS & HANDICAP PUSH ACTIVATOR. (SEE DOOR SCHEDULE)
6. NEW STAGE CURTAIN SYSTEM. (VERIFY ALL REQUIREMENTS)
7. NON-POWERED WINDOW SHADE (SEE INTERIOR DRAWINGS)
8. POWERED WINDOW SHADE (SEE INTERIOR DRAWINGS)
9. INFILL OPENING FOR RADIATORS. (SEE MECHANICAL DRAWINGS)
10. NEW HALF-WALL. (SEE INTERIOR DRAWINGS)
11. DECORATIVE INFILL TO COVER HOLE FROM REMOVED DUCTWORK. (SEE INTERIOR DRAWINGS)
12. NEW DRAW CURTAIN (SEE INTERIOR DRAWINGS)
13. NEW RAILING ON TOP OF EXISTING WALL. (SEE SECTIONS)
14. RELOCATE EXISTING FIRE EXTINGUISHER.

Wall Types

INDICATES EXISTING WALL CONSTRUCTION

NON-RATED METAL STUD WALL

A1 — 5/8" GYPSUM BOARD ON EACH SIDE OF 3 5/8" METAL STUDS @ 1'-4" O.C. WITH 3 1/2" SOUND ATTENUATION BLANKET

A1a — SAME AS A1 EXCEPT: ON 6" METAL STUDS

A1c — SAME AS A1 EXCEPT: ON 6" METAL STUDS SUBSTITUTE 5/8" FIRE RETARDANT TREATED PLYWOOD IN LIEU OF GYPSUM BOARD @ LOCATIONS OF PANELING SYSTEM

NON-RATED METAL STUD FURRING

B1 — 5/8" "TYPE X" GYPSUM BOARD ON 3 5/8" METAL STUDS @ 1'-4" O.C.

ONE HOUR METAL STUD WALL (U.L. DESIGN NO. 465)

C1 — 5/8" "TYPE X" GYPSUM BOARD ON EACH SIDE OF 3 5/8" METAL STUDS @ 1'-4" O.C. WITH 3 1/2" SOUND ATTENUATION BLANKET

NON-RATED EXTERIOR WALL

D1 — BORAL TRIM (PAINT) ON 1/2" ZIP SHEATHING ON 6" METAL STUDS @ 1'-4" O.C. WITH 5/8" "TYPE X" GYPSUM BOARD ON INTERIOR SIDE WITH 5 1/2" BATT INSULATION

WALL TYPE NOTES:

CONTRACTOR CAN SUBSTITUTE FIRE-RETARDANT TREATED WOOD IN PLACE OF METAL STUDS.

WALL FINISH MATERIAL WILL VARY. SEE INTERIOR DESIGN PACKAGE.

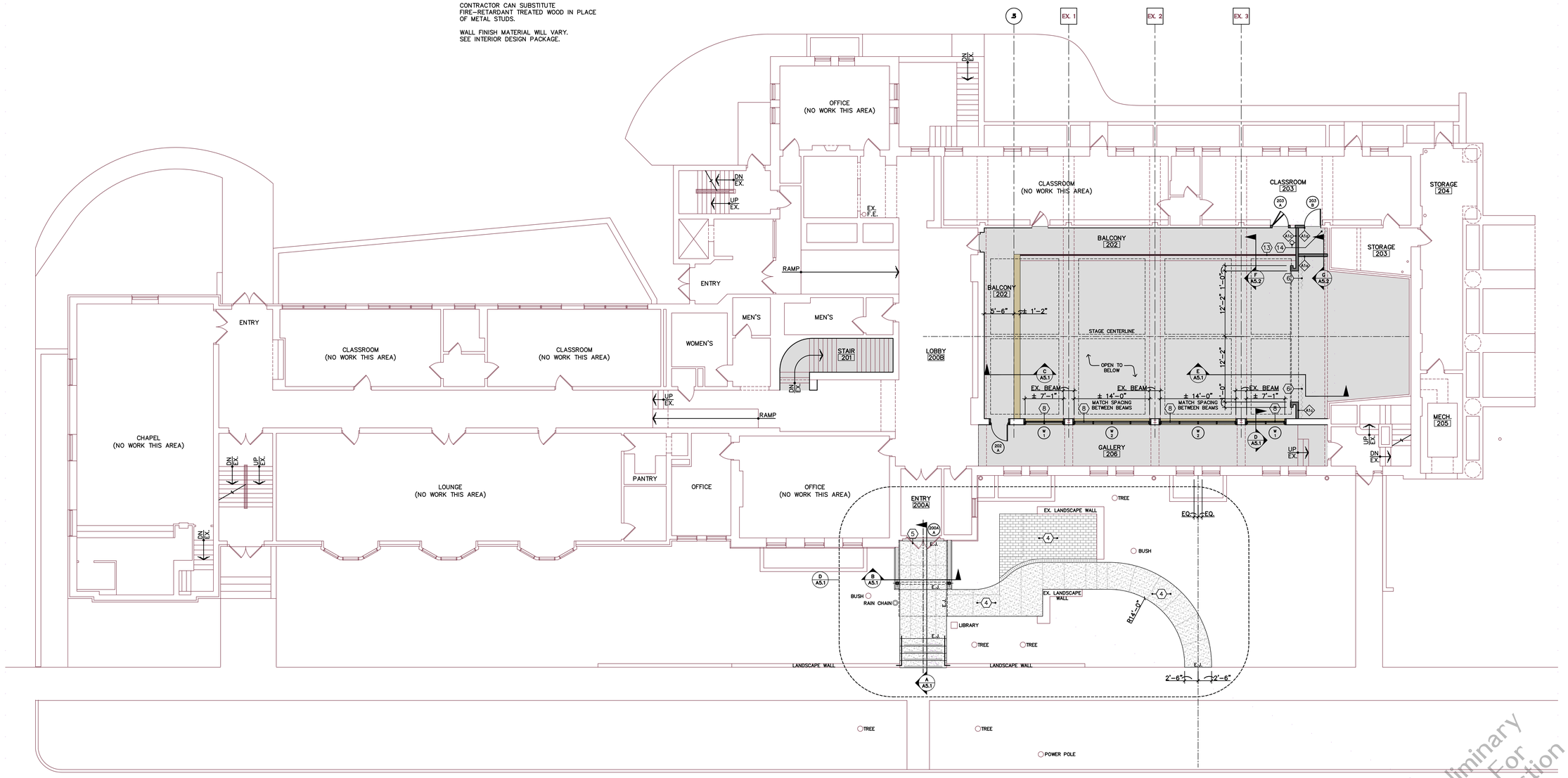

Main Level Plan

SCALE 1/8" = 1'-0"

Preliminary Not For Construction

PRELIMINARY NOT FOR CONSTRUCTION

ISSUE:
2-13-24 REVIEW
3-15-24 75% SET

UNITED CHURCH OF CHRIST

LAKEWOOD CONGREGATIONAL CHURCH

SITE & INTERIOR IMPROVEMENTS
Lakewood, Ohio
1375 W Clifton Boulevard

The Arcus Group, Inc.
ARCHITECTS
1244 Smith Court
Rocky River, OH 44116
Tel: 440.356.5530
Fax: 440.356.5584

Main Level Plan

A2.2

COPYRIGHT © 2024

PROJECT NO: 23-09
DRAWN BY:
CHECKED BY: DTM

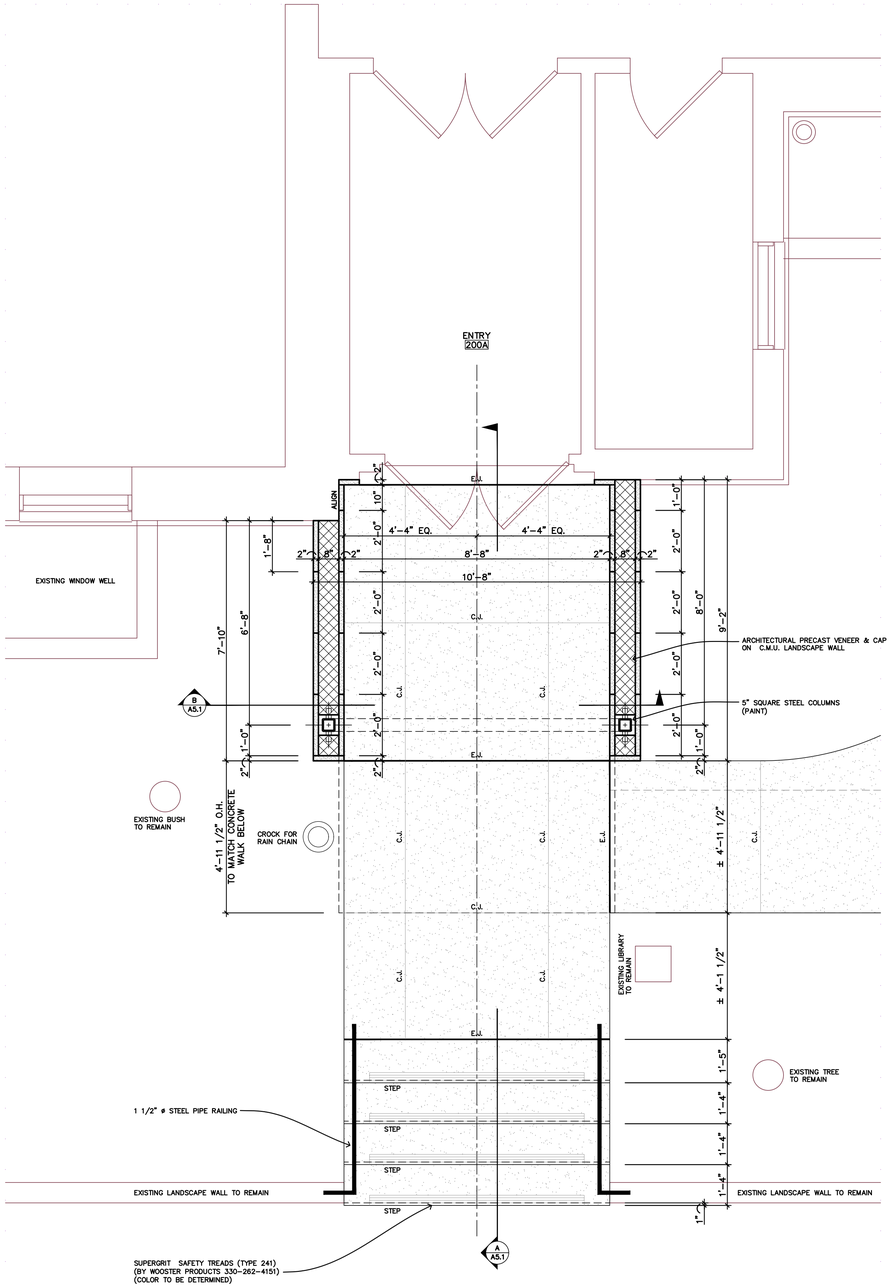

Enlarged Entry Plan

SCALE 1/2" = 1'-0"

1
A2.3

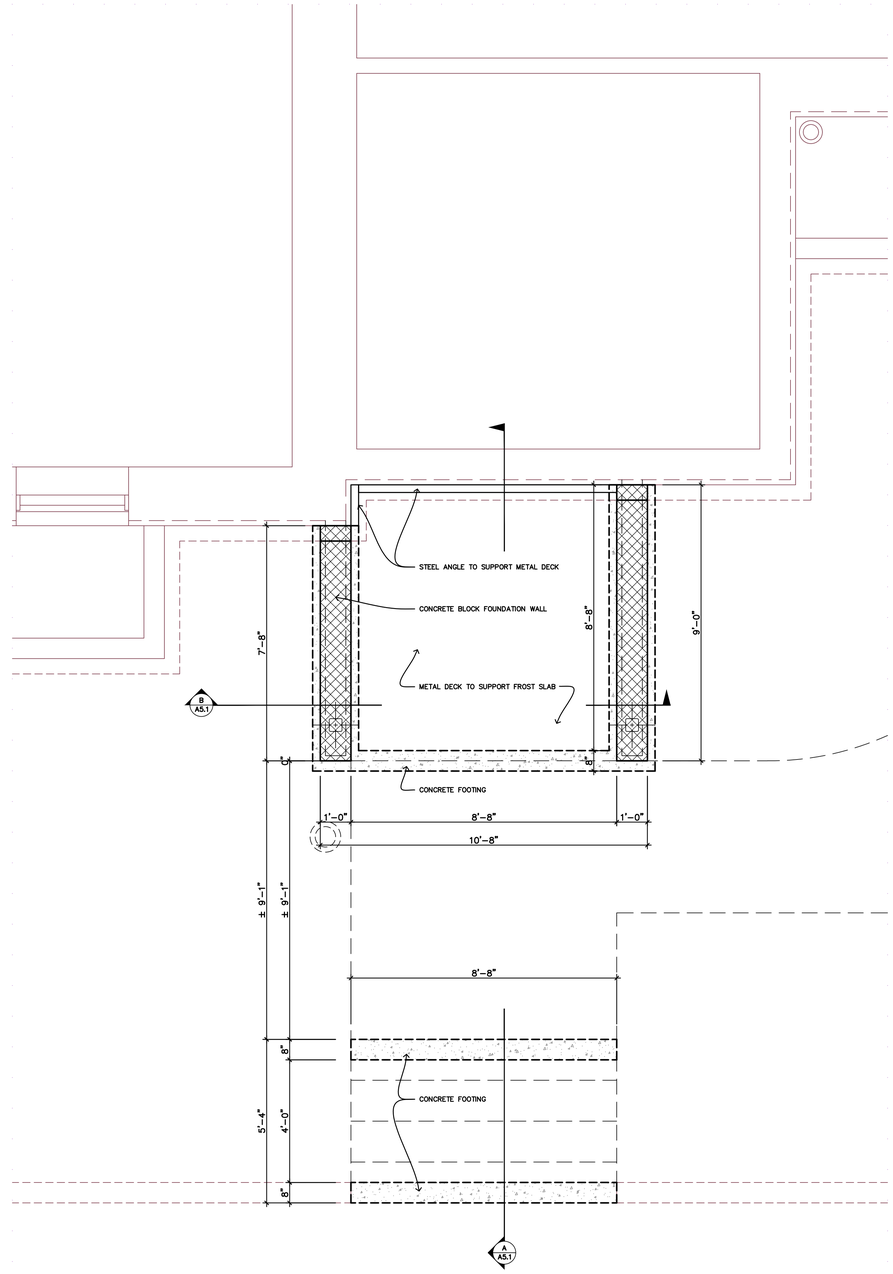

Enlarged Entry Foundation Plan

SCALE 1/2" = 1'-0"

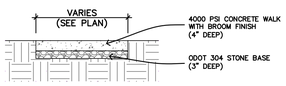

Sidewalk Detail

SCALE 1/2" = 1'-0"

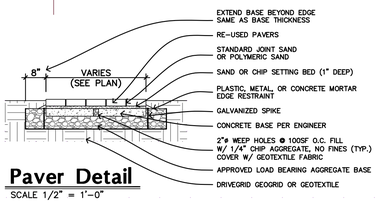

Paver Detail

SCALE 1/2" = 1'-0"

Preliminary Not For Construction

PRELIMINARY NOT FOR CONSTRUCTION

ISSUE:
3-15-24 75% SET

UNITED CHURCH OF CHRIST

LAKEWOOD CONGREGATIONAL CHURCH

SITE & INTERIOR IMPROVEMENTS
Lakewood, Ohio
1375 W Clifton Boulevard

The Arcus Group, Inc.
ARCHITECTS
1244 Smith Court
Bay Village, Ohio 44115
Tel: 440.835.5530
Fax: 440.356.5584

Enlarged Entry Plan

A2.3

COPYRIGHT © 2024

PROJECT NO: 23-09
DRAWN BY:
CHECKED BY: DTM

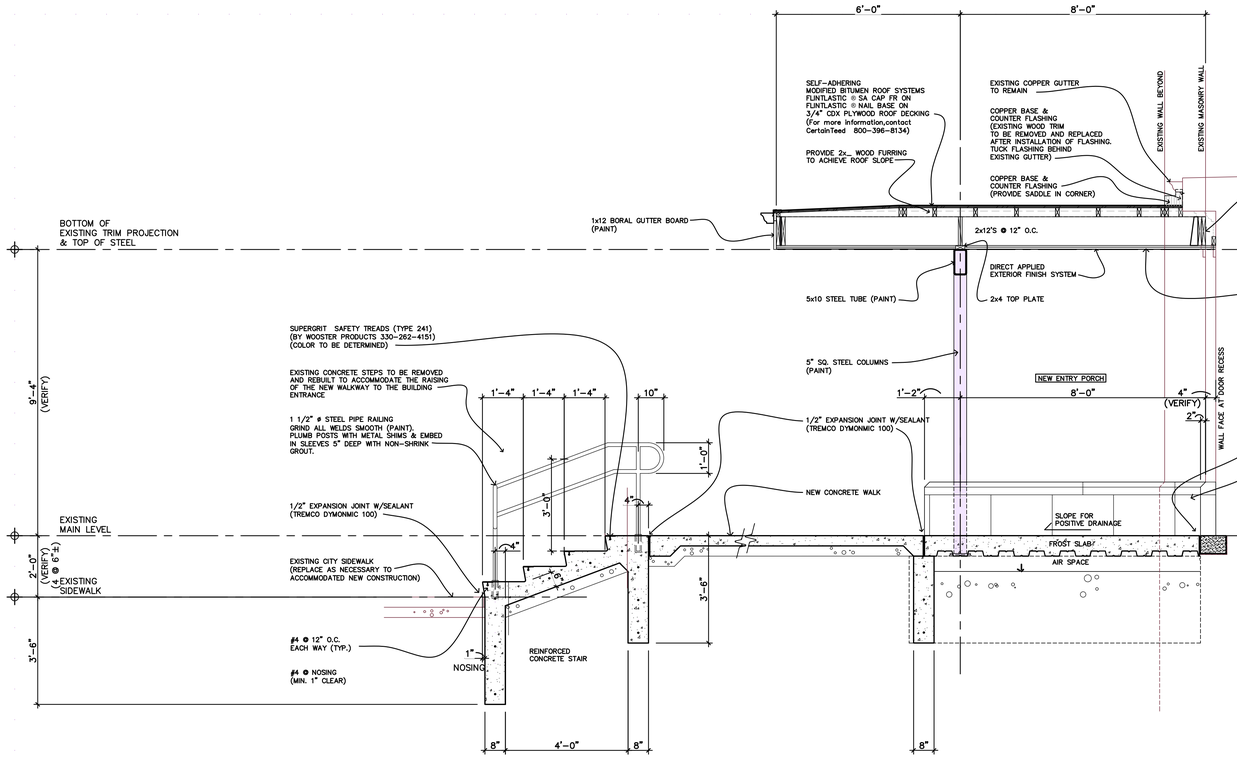

SEE DEMOLITION PLAN FOR ADDITIONAL NOTES

Section A
SCALE 1/2" = 1'-0" A5.1

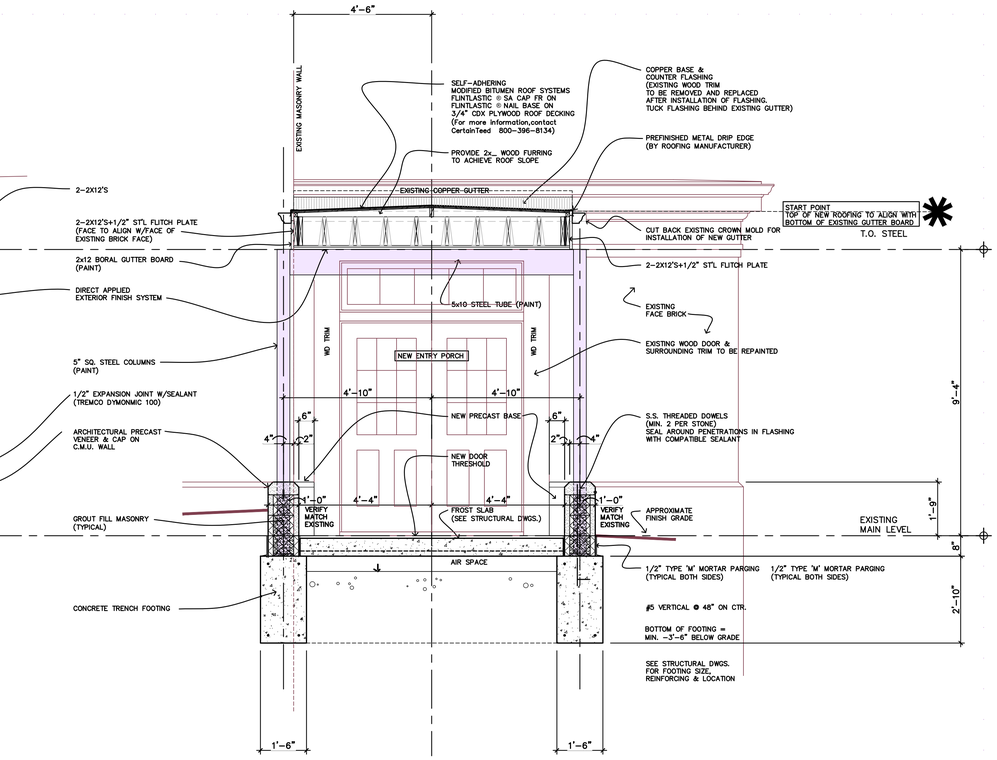

Section B
SCALE 1/2" = 1'-0" A5.1

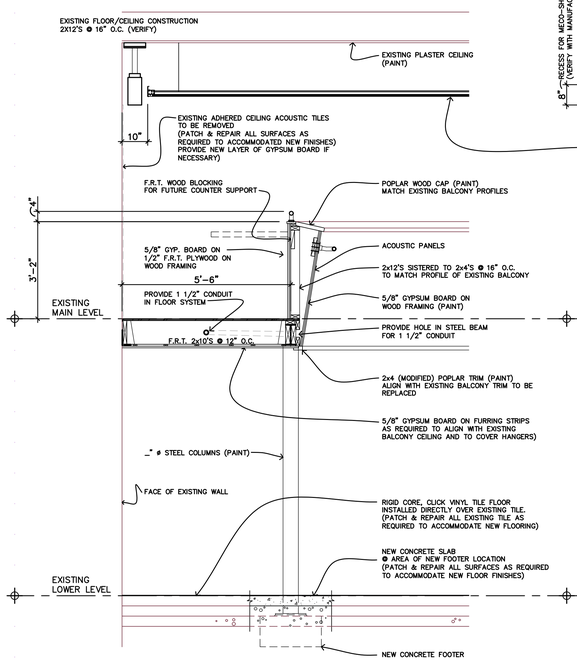

Section C
SCALE 1/2" = 1'-0" A5.1

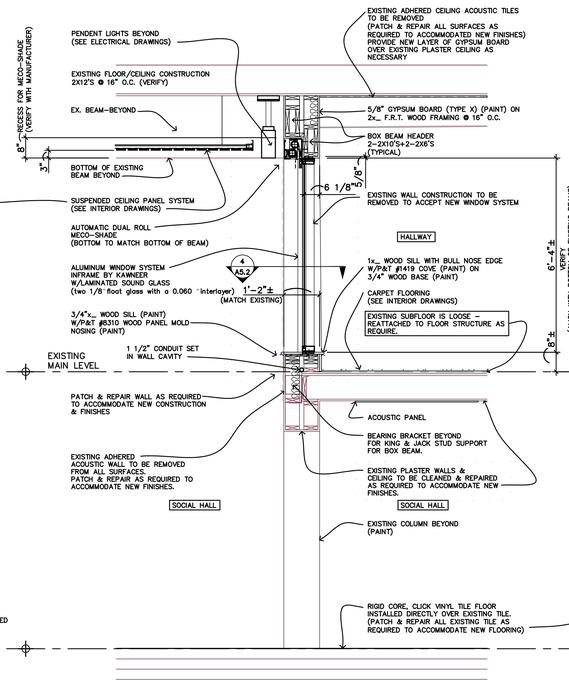

Section D
SCALE 1/2" = 1'-0" A5.1

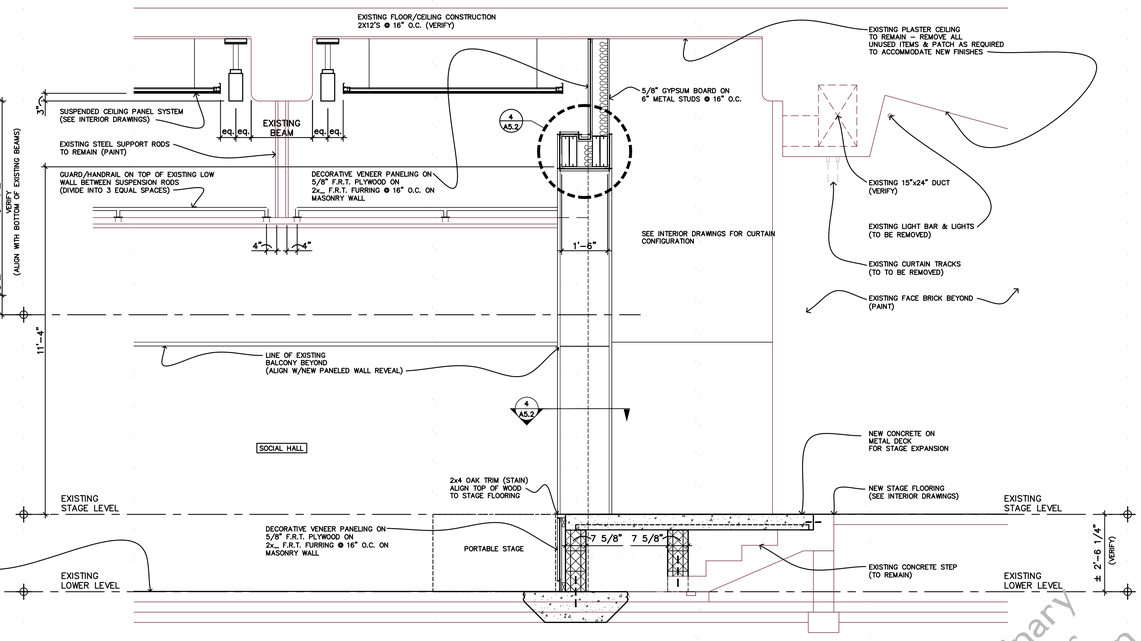

Section E
SCALE 1/2" = 1'-0" A5.1

Preliminary Not For Construction

PRELIMINARY NOT FOR CONSTRUCTION

ISSUE: 3-15-24 75% SET

UNITED CHURCH OF CHRIST

LAKEWOOD CONGREGATIONAL CHURCH

SITE & INTERIOR IMPROVEMENTS
Lakewood, Ohio
1375 W Clifton Boulevard

The Arcus Group, Inc.
ARCHITECTS
12344 Smith Court
Rocky River, Ohio
Tel: 440.356.5530

Wall Sections, Details & Notes

A5.1
Sheet Number
COPYRIGHT © 2024

PROJECT NO: 23-09
DRAWN BY:
CHECKED BY: DTM

Site & Interior Improvements

LAKEWOOD CONGREGATIONAL CHURCH

1375 West Clifton Boulevard Lakewood, Ohio

PROJECT TEAM

PROPERTY OWNER:
CHURCH 1ST CONGREGATIONAL OF LAKEWOOD
1375 WEST CLIFTON BOULEVARD
LAKEWOOD, OHIO 440107
(216) 221-9555

ARCHITECT:
THE ARCUS GROUP, INC.
1244 SMITH COURT
ROCKY RIVER, OHIO 44116
DAVID MADDUX, PRINCIPAL
dmaddux@arcus-group.com
(440) 356-5530

INTERIOR DESIGNER:
RICHARDSON DESIGN
2570 EAST SUPERIOR AVENUE
CLEVELAND, OHIO 44114
SCOTT RICHARDSON
scott@richardsondesign.com
(216) 696-6780

M.E.P. ENGINEERS:
DENK & ASSOCIATES, INC.
503 EAST 200TH STREET
CLEVELAND, OHIO 44119
MIKE DENK, PE PRINCIPAL
mdenk@denkassoc.com
(216) 531-8880

STRUCTURAL ENGINEER:
ORAVEC DESIGN/BUILD LLC
9320 RAVENNA ROAD - SUITE E
TWINSBURG, OHIO 44087
MATT ORAVEC, PE PRINCIPAL
matt@oravecdesignbuild.com
(330) 552-8211

LIGHTING CONSULTANT:
RF LIGHTING DESIGN
2886 GREEN ROAD
SHAKER HEIGHTS,OHIO 44122
RON FRIEDMAN, LIGHTING DESIGNER
ron@rfriedmanld.com
(216) 465-4138

EXTERIOR RENDERING

DRAWING INDEX

TITLE
T1.1 TITLE SHEET, CODE ANALYSIS, RENDERING, & LOCATION MAP

CIVIL
C1.0 BOUNDARY SURVEY

ARCHITECTURAL
A2.0 DEMOLITION PLAN
A2.1 LOWER LEVEL PLAN
A2.2 MAIN LEVEL PLAN
A2.3 ENLARGED ENTRY PLAN
A3.1 REFLECTED CEILING PLANS
A5.1 WALL SECTIONS, DETAILS & NOTES
A5.2 WALL SECTIONS, DETAILS & NOTES
A5.3 DETAILS
A7.1 DOOR SCHEDULE, FRAMES & TYPES
A11.1 ACCESSIBILITY STANDARDS, REQUIREMENTS & NOTES

STRUCTURAL
S1.1 LOWER LEVEL STRUCTURAL PLAN
S1.2 MAIN LEVEL STRUCTURAL PLAN
S2.1 STRUCTURAL NOTES & DETAILS

MECHANICAL
M1.0 MECHANICAL LEGENDS, NOTES & SPECIFICATIONS
M1.1 HVAC SCHEDULES
M2.0 MECHANICAL DEMOLITION PLAN
M2.1 HVAC PLAN

ELECTRICAL
E1.0 ELECTRICAL LEGENDS, NOTES & SPECIFICATIONS
E1.1 ELECTRICAL LIGHTING & PANEL SCHEDULES
E2.0 ELECTRICAL DEMOLITION PLANS
E2.1 ELECTRICAL POWER & LIGHTING PLANS

PLUMBING
P1.0 PLUMBING LEGENDS, NOTES & SPECIFICATIONS
P1.1 PLUMBING SCHEDULES
P2.1 PLUMBING PLANS

INTERIOR DESIGN
ID1.0 LOWER LEVEL FINISH PLAN
ID1.1 MAIN LEVEL FINISH PLAN
ID3.0 ELEVATIONS

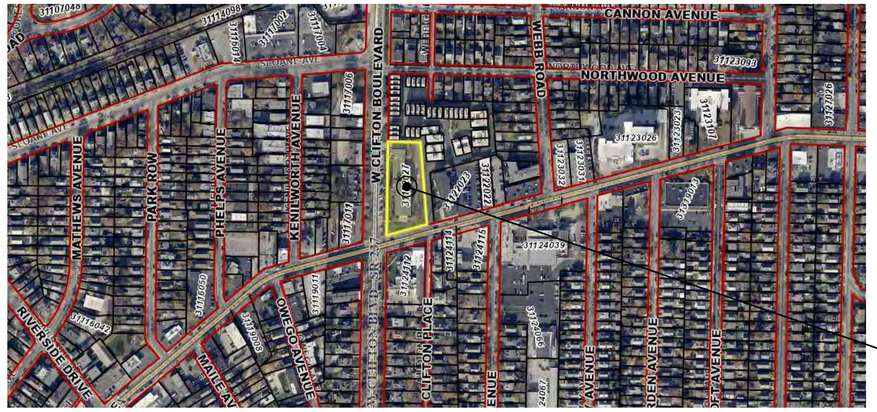

LOCATION MAP

GENERAL NOTES

CONTRACTORS ARE REQUIRED TO SUBMIT TO THE ARCHITECT FOR REVIEW PRODUCT DATA, SHOP DRAWINGS, TEST REPORTS, AND/OR MATERIAL SAMPLES FOR DETERMINATION OF CONFORMANCE WITH THE DRAWINGS AND SPECIFICATIONS HEREIN. SUBMITTALS ARE REQUIRED FOR ALL BUILDING COMPONENTS INCLUDING BUT NOT LIMITED TO:

ROOFING, INSULATION, MASONRY, WINDOWS & DOORS, ALL EXTERIOR & INTERIOR FINISHES, ALL MECHANICAL, HVAC, PLUMBING, ELECTRICAL, & LIGHTING SYSTEMS/EQUIPMENT, ETC.

NO BUILDING MATERIAL AND/OR COMPONENT SHALL BE CONSTRUCTED/INSTALLED WITHOUT SIGNED/DATED APPROVAL OF EACH SUBMITTAL FROM THE ARCHITECT. CONTRACTORS SHALL SUBMIT THREE-(3) COPIES OF EACH SUBMITTAL TO THE ARCHITECT. ONE COPY SHALL BE RETAINED BY THE ARCHITECT. ONE COPY SHALL BE RETAINED BY THE OWNER. ONE COPY SHALL BE RETURNED TO THE CONTRACTOR PRIOR TO CONSTRUCTION.

PRIOR TO BIDDING THE WORK, THE CONTRACTOR SHALL EXAMINE, INVESTIGATE AND INSPECT THE CONSTRUCTION SITE AS TO THE NATURE AND LOCATION OF THE WORK AND THE GENERAL AND LOCAL CHARACTER OF THE SURFACE OR SUBSURFACE CONDITIONS AND OBSTACLES TO BE ENCOUNTERED DURING THE CONSTRUCTION. FURTHER INVESTIGATIONS MAY BE MADE AT THE CONTRACTOR'S OPTION AND EXPENSE, SUBJECT TO THE ARCHITECTS APPROVAL.

DURING THE EXECUTION OF THE WORK, THE CONTRACTOR SHALL IMMEDIATELY REPORT IN WRITING ANY CONDITIONS DIFFERENT FROM WHAT IS INDICATED IN THE REPORT ON SUBSURFACE CONDITIONS AND/OR THE CONTRACT DOCUMENTS.

THE CONTRACTOR SHALL ASSUME FULL RESPONSIBILITY FOR ANY CONCLUSIONS OR INTERPRETATION HE SHALL MAKE ON THE BASIS OF THE INFORMATION PROVIDED.

DO NOT SCALE DRAWINGS. WRITTEN DIMENSIONS ARE THE ONLY ACCEPTABLE MEANS OF LOCATION.

PROVIDE WALL BOARD TRIM AT ALL EXPOSED EDGES AND CORNERS OF GYPSUM WALLBOARD CONSTRUCTION. J-BEAD OR OTHER NON-DRYWALL COMPOUND TRIM PIECES PROHIBITED (U.N.O.)

IT IS THE INTENTION OF THE KEY NOTES LOCATED ON THE VARIOUS SHEET(S) WITHIN THIS DRAWING SET TO IDENTIFY CONSTRUCTION ELEMENTS, NOT NECESSARILY DESCRIBE ENTIRE ASSEMBLIES OR PROCESSES. THE INSTALLATION OF SAID ELEMENT SHOULD INCLUDE ALL ASSOCIATED CONSTRUCTION NECESSARY TO ACHIEVE INSTALLATION AND OPERATION (USE) OF SAID ITEM. FOR EXAMPLE, THE INSTALLATION OF CERAMIC TILE SHALL INCLUDE (BUT BE NOT LIMITED TO) THE SURFACE PREPARATION, MASTIC, GROUT, EDGE STRIPS, SEALING, CLEANING, ETC. IN ADDITION, IF THE PLUMBER INSTALLS A LAVATORY, IT MEANS HE/SHE SHALL PREPARE SURFACE(S), SET LAVATORY, SEAL AROUND BOWL, PROVIDE FAUCET, CONNECT TO PLUMBING AS NECESSARY TO ACHIEVE AN AESTHETICALLY PLEASING, ACCESSIBLE (WHERE INDICATED), OPERATIONAL LAVATORY UPON COMPLETION OF THE PROJECT.

ALL ELEVATIONS ARE BASED ON 0.00' REFERENCING A GRADE LEVEL OF 0.00' EXCEPT FOR ELEVATIONS THAT REFERENCE A.F.F (ABOVE FINISHED FLOOR) OR OTHER SPECIFIC INDICATOR.

DIMENSIONS SHOWN ARE FOR REFERENCE AND ARE TO COMMUNICATE CRITICAL AREAS FOR DESIGN INTENT. FINAL DRAWINGS MAY VARY BASED ON CONSTRUCTION PRACTICES, LOCAL CODE REQUIREMENTS OR SPECIFIC SITE REQUIREMENTS.

REFERENCE DIMENSION (RD) THESE DIMENSIONS ARE PROVIDED FOR GENERAL REFERENCE ONLY. ACTUAL DIMENSION MAY VARY BASED ON CONSTRUCTION METHOD.

Index to Drawing Symbols

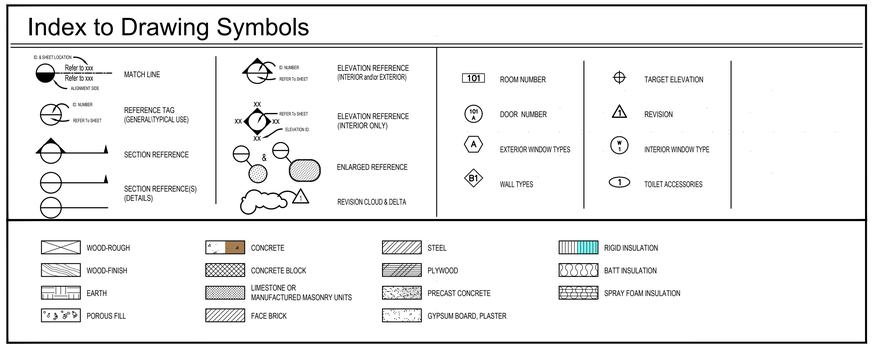

CODE ANALYSIS

1. DESIGN AND CONSTRUCTION CODE:
   OHIO BUILDING CODE – 2024 OHIO BUILDING CODE & OHIO EXISTING BUILDING CODE
   CODIFIED ORDINANCES OF LAKEWOOD, OHIO
2. **USE GROUP CLASSIFICATION:**
   PLACE OF RELIGIOUS WORSHIP — USE GROUP A-3: ASSEMBLY
3. **CONSTRUCTION CLASSIFICATION:**
   TYPE OF CONSTRUCTION — TYPE V-B (ASSUMED)
   ALTERATION – LEVEL 2 (SECTION 602)
4. **BUILDING AREAS:**
   NO CHANGES TO EXISTING
5. **OCCUPANCY LOAD:**
   NO CHANGES TO EXISTING
6. **OCCUPANCY LOAD:**
   NO CHANGES TO EXISTING
7. **MAXIMUM TRAVEL DISTANCE:**
   NO CHANGES TO EXISTING
8. **NUMBER OF EXITS:**
   NO CHANGES TO EXISTING

Preliminary Not For Construction

PRELIMINARY NOT FOR CONSTRUCTION

ISSUE: 3-15-24 75% SET

UNITED CHURCH OF CHRIST

LAKEWOOD CONGREGATIONAL CHURCH

SITE & INTERIOR IMPROVEMENTS
Lakewood, Ohio
1375 W Clifton Boulevard

The Arcus Group, Inc.
ARCHITECTS
1244 Smith Court
Rocky River, Ohio 44116
Tel: 440.356.5530

Title Sheet, Code Analysis, Rendering & Location Map

T1.1
Sheet Number

COPYRIGHT © 2024

PROJECT NO: 23-09
DRAWN BY: BCK
CHECKED BY: DTM

1375
Congregational
Church
10:00 Worship
Service
and
Church School
BARNES
NURSERY
SCHOOL

Universalist
Congregational
Church
Holds Worship
Service
and
Church School
Sunday
10 o'clock
School

1375
1375
Little Free Library

1375

1375

BOARD OF BUILDING STANDARDS
ARCHITECTURAL REVIEW BOARD
SIGN REVIEW BOARD

12650 Detroit Avenue ● (216) 529-6630 ● FAX (216) 529-5907 ● www.lakewoodoh.gov

Application Cover Page

Docket No.: 05-41-24

Permit No.: BBS24-000042

Applicant Name: Charles A. McGettrick; Architects, C.A. McGettrick LLC

Project Address: 1246 Manor Park Ave.

Project Name: n/a

Project: Applicant proposes a new front porch and two-story addition with breezeway leading to two-car garage on the rear of the home.

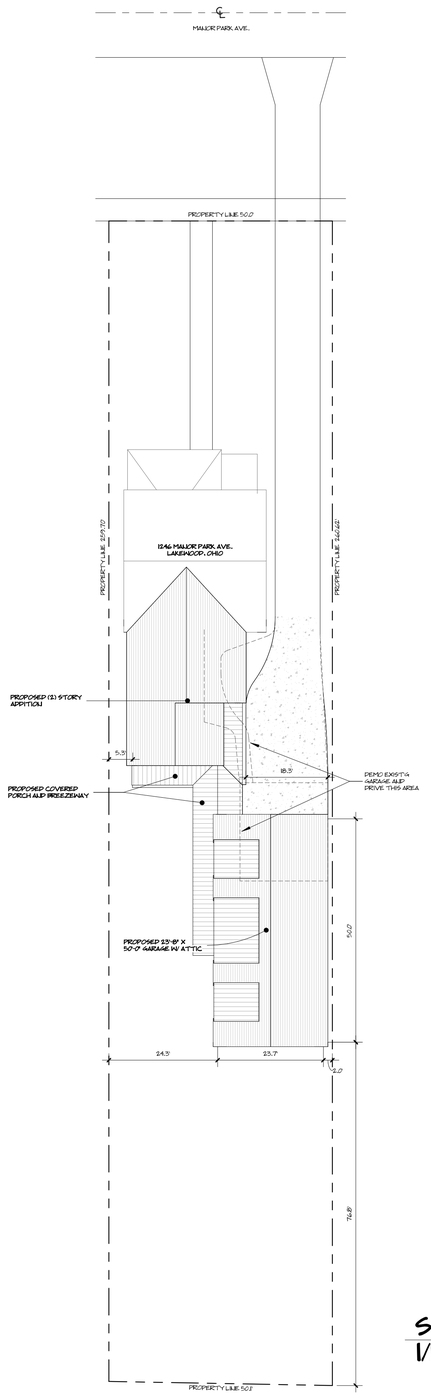

SITE PLAN
1/16" = 1'-0"

DATE: 4/17/24
REVISION:

NOT FOR CONSTRUCTION

ESSI RESIDENCE
1246 Manor Park Ave. Lakewood, Ohio 44107

ARCHITECTS, C.A. McGETTRICK, LLC
14551 Madison Ave. Lakewood, Ohio 44107 216-227-0700 FAX: 216-227-0712

COMMISSION NO:
22027

CHARLES MCGETTRICK JR. #77595
EXPIRATION DATE: 12/31/2024

SP

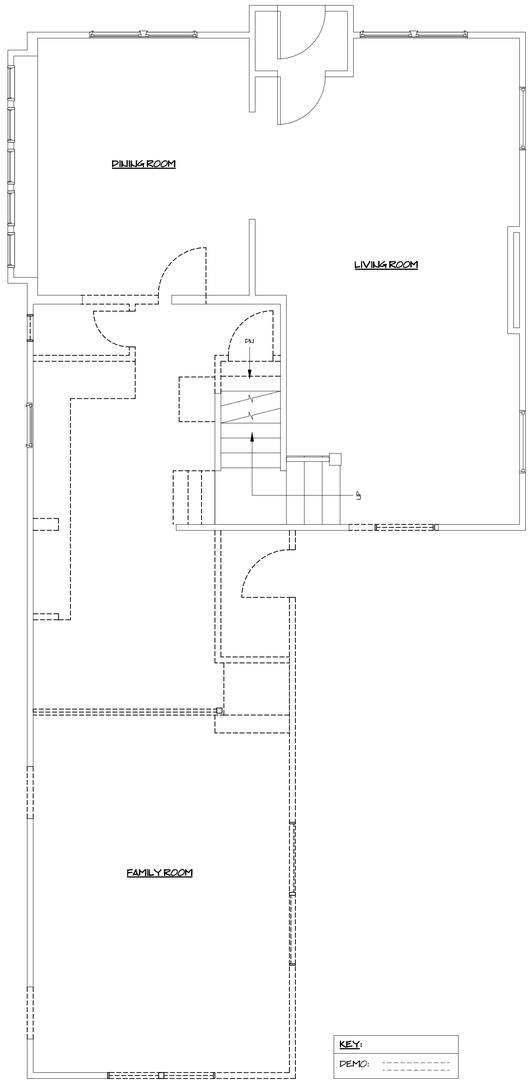

KEY:
DEMO:

FIRST FLOOR DEMO PLAN
1/4" = 1'-0"

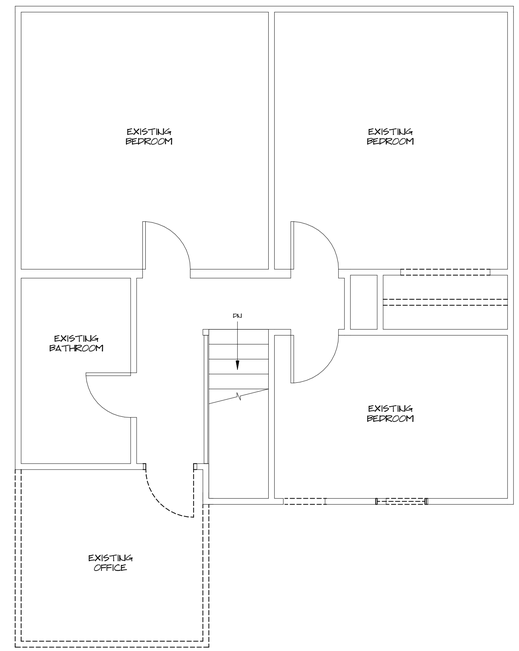

SECOND FLOOR DEMO PLAN
1/4" = 1'-0"

DATE: 4/17/24
REVISION:

NOT FOR CONSTRUCTION

ESSI RESIDENCE
1246 Manor Park Ave. Lakewood, Ohio 44107

ARCHITECTS, C.A. McGETTRICK, LLC
14551 Madison Ave. Lakewood, Ohio 44107 216-227-0700 FAX: 216-227-0712

COMMISSION NO:
22027
CHARLES MCGETTRICK JR. #77595
EXPIRATION DATE: 12/31/2024

A-1

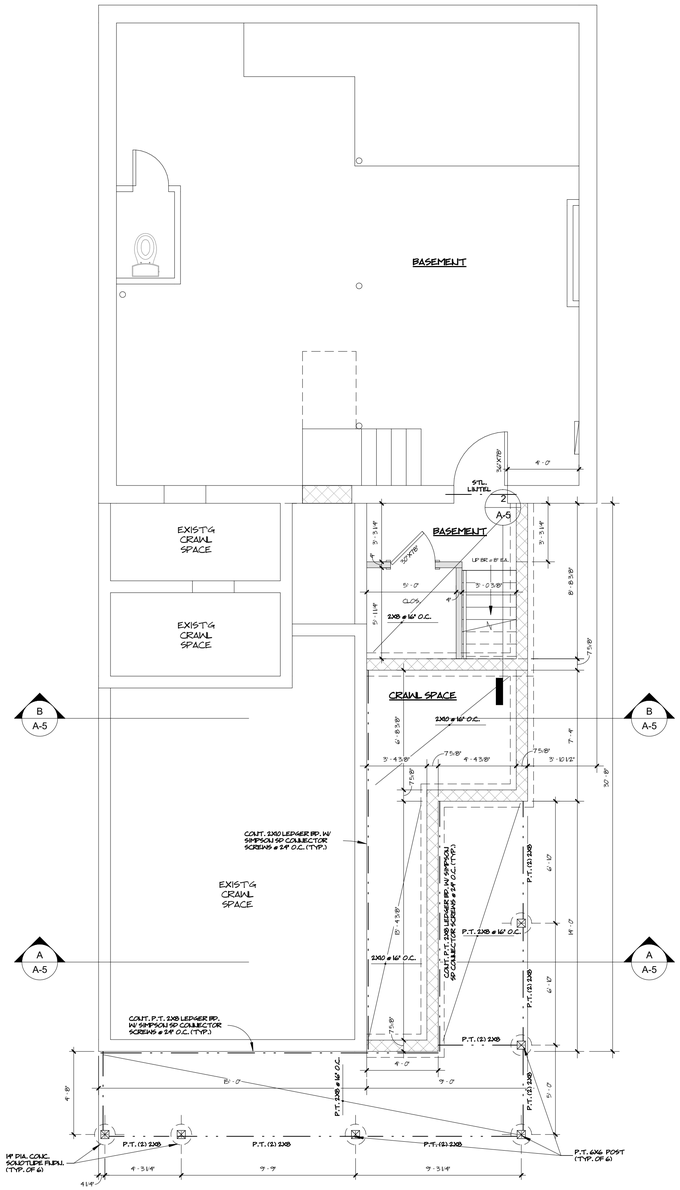

FOUNDATION PLAN
1/4" = 1'-0"

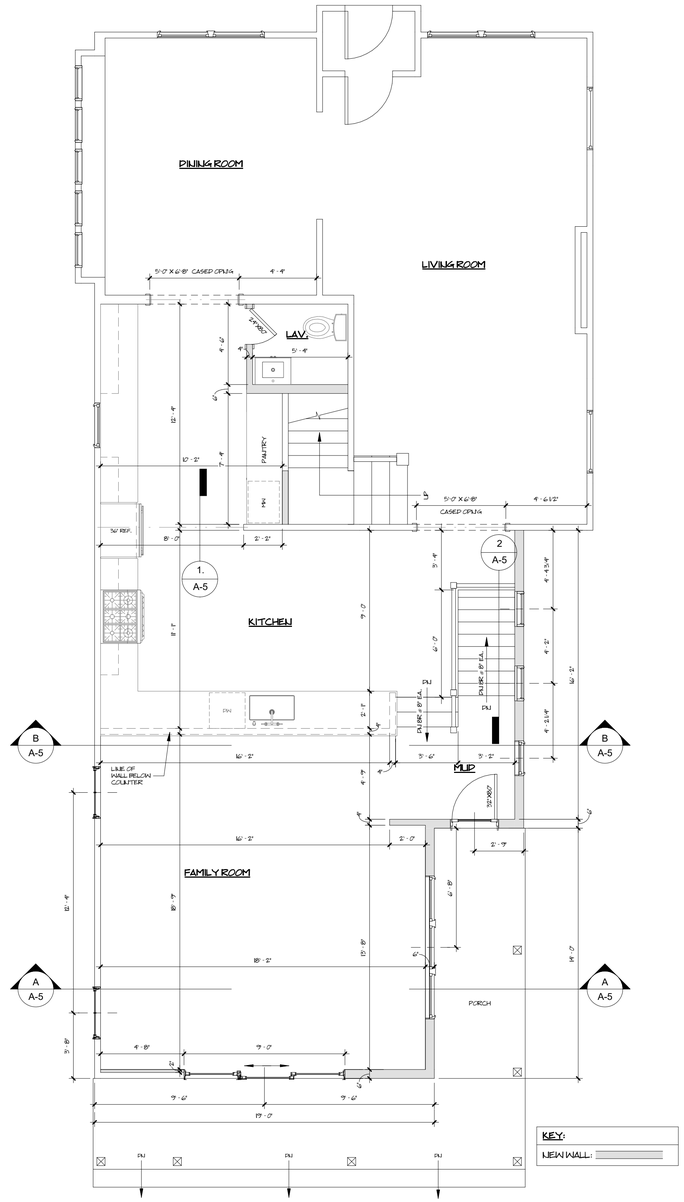

FIRST FLOOR PLAN
1/4" = 1'-0"

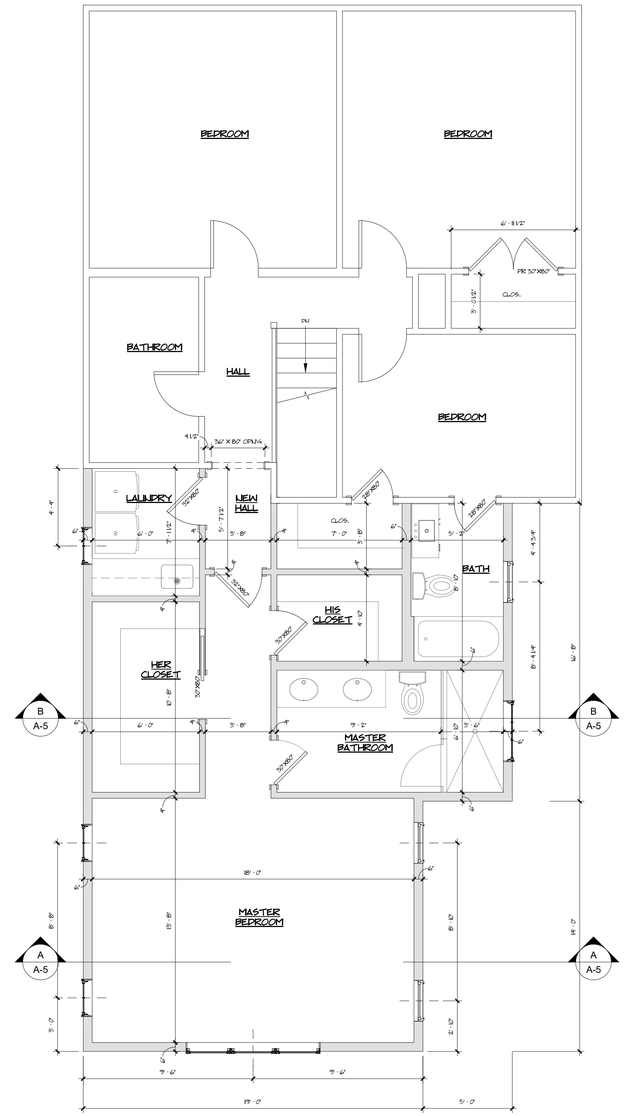

SECOND FLOOR PLAN
1/4" = 1'-0"

DATE: 4/17/24
REVISION:

NOT FOR CONSTRUCTION

ESSI RESIDENCE

1246 Manor Park Ave. Lakewood, Ohio 44107

ARCHITECTS, C.A. McGETTRICK, LLC
14551 Madison Ave. Lakewood, Ohio 44107 216-227-0700 FAX: 216-227-0712

COMMISSION NO:
22027

CHARLES MCGETTRICK JR. #775915
EXPIRATION DATE: 12/31/2024

A-2

CAST-IN-PLACE CONCRETE

1. CAST-IN-PLACE CONCRETE WORK SHALL CONFORM TO THE LATEST AMERICAN CONCRETE INSTITUTE (ACI) CODES AND STANDARDS LISTED IN THE CONTRACT DOCUMENTS, EXCEPT AS MODIFIED THEREIN.

2. ALL CONCRETE SHALL DEVELOP A MINIMUM COMPRESSIVE STRENGTH IN 28 DAYS AS FOLLOWS:

FOOTINGS AND GRADE BEAMS	3000 PSI
WALLS AND COLUMNS	4000 PSI
SLAB-ON-GRADE	4000 PSI
MUD MAT	2500 PSI
ALL OTHER	3000 PSI

3. ALL CONCRETE EXPOSED TO WEATHER SHALL CONTAIN AN AIR-ENTRAINING ADMIXTURE CONFORMING TO ASTM C260. AIR ENTRAINMENT SHALL BE 6% +/- 1%.

4. REINFORCING BARS: ASTM A-615, GRADE 60

5. WELDED WIRE FABRIC (WWF): ASTM A-1064 FOR SMOOTH STEEL WIRE & DEFORMED STEEL WIRE

6. NO TACK WELDING OF REINFORCING IN THE FIELD SHALL BE PERMITTED.

7. REINFORCING BAR LAP SPLICES AND TENSION DEVELOPMENT LENGTHS SHALL CONFORM WITH TABLES ON THIS DRAWING.

8. ALL WELDED WIRE FABRIC (WWF) SHALL BE CHAIRED TO ITS PROPER HEIGHT AND MAINTAINED AT THE PROPER HEIGHT THROUGHOUT PLACEMENT OF CONCRETE. LIFTING OF THE WWF WITH A HOOK DURING CONCRETE PLACEMENT SHALL NOT BE PERMITTED.

9. CONCRETE SHALL BE DISCHARGED AT THE SITE WITHIN 1-1/2 HOURS AFTER WATER HAS BEEN ADDED TO THE CEMENT AND AGGREGATES. ADDITION OF WATER TO THE MIX AT THE PROJECT SITE IS NOT PERMITTED. ALL WATER MUST BE ADDED AT THE BATCH PLANT. SLUMP MAY BE ADJUSTED ONLY THROUGH THE USE OF ADDITIONAL WATER REDUCING ADMIXTURE OR HIGH RANGE WATER REDUCING ADMIXTURE.

10. ALL CONCRETE SHALL CONTAIN A WATER REDUCING ADMIXTURE CONFORMING TO ASTM C494, TYPE A, F OR G.

STRUCTURAL WOOD

1. DETAIL, FABRICATE AND ERECT STRUCTURAL WOOD IN ACCORDANCE WITH THE LATEST AWC DESIGN SPECIFICATIONS AND THE GOVERNING BUILDING CODE.

2. ALL STRUCTURAL FRAMING MEMBERS SHALL BE SPRUCE-PINE-FIR (SPF) NO.1/NO.2 OR BETTER OR DOUGLAS FIR-LARCH (NORTH) NO.1/NO.2, U.N.O.

3. ALL ROOF PANEL SHEATHING SHALL BE 5/8" TYPE CDX, EXPOSURE 1 APA RATED SHEATHING. SUITABLE EDGE SUPPORT SHALL BE PROVIDED BY USE OF PANEL CLIPS OR BLOCKING BETWEEN FRAMING. CONNECT ROOF SHEATHING WITH 8d COMMON NAILS AT 6" O.C. AT SUPPORTED PANEL EDGES AND 6" O.C. AT INTERMEDIATE SUPPORTS, U.N.O.

4. ALL FLOOR SHEATHING SHALL BE 3/4" APA RATED STURD-I-FLOOR, EXPOSURE 1, WITH TONGUE AND GROOVE EDGE. CONNECT FLOOR SHEATHING WITH 10d COMMON NAILS AT 6" O.C. AT SUPPORTED EDGES AND 12" O.C. AT INTERMEDIATE SUPPORTS. FIELD GLUE USING ADHESIVES MEETING LATEST APA SPECIFICATIONS AND APPLIED IN ACCORDANCE WITH MANUFACTURER'S WRITTEN INSTRUCTIONS.

5. ALL WALL SHEATHING SHALL BE 1/2" TYPE CDX, EXPOSURE 1 APA RATED SHEATHING. CONNECT WALL SHEATHING WITH 10d COMMON NAILS @ 6" O.C. AT SUPPORTED PANEL EDGES AND 12" O.C. AT INTERMEDIATE SUPPORTS, U.N.O.

6. USE PRESSURE TREATED LUMBER WHERE WOOD IS EXPOSED TO WEATHER, MOISTURE, CONCRETE, MASONRY OR THE GROUND.

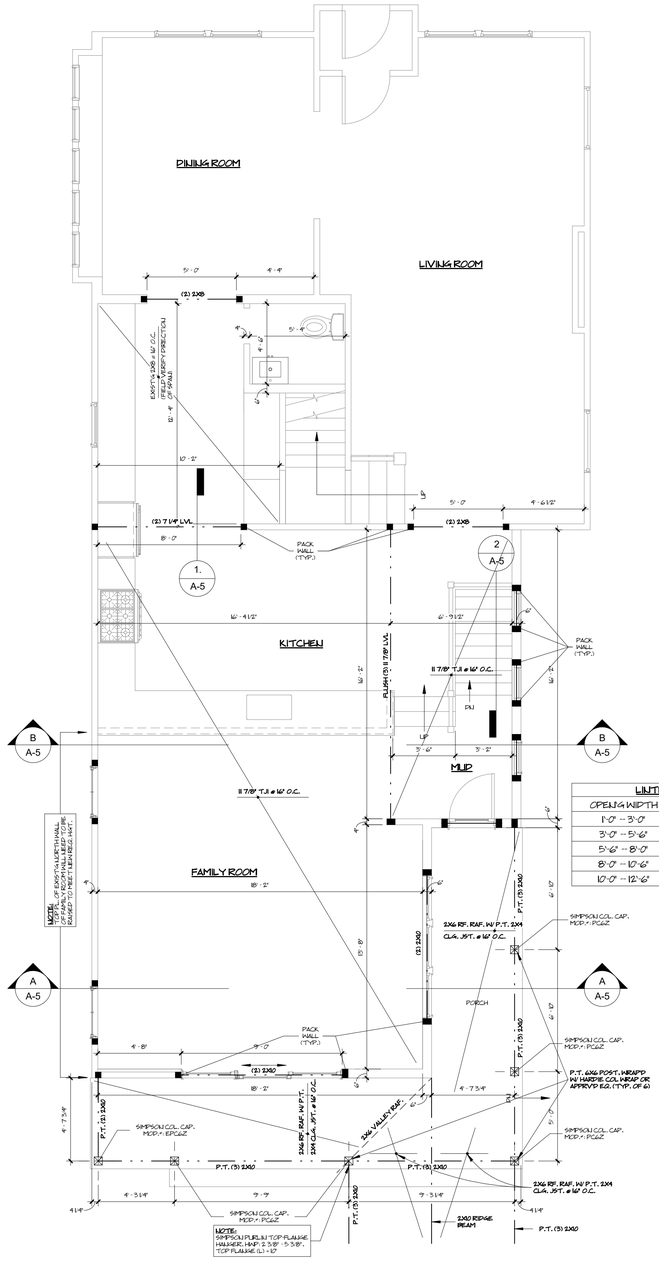

FIRST FLOOR FRAMING PLAN
1/4" = 1'-0"

LINTEL SCHEDULE	
OPENING WIDTH	LINTEL SIZE
1'-0" – 3'-0"	(2) 2X4
3'-0" – 5'-6"	(2) 2X6
5'-6" – 8'-0"	(2) 2X8
8'-0" – 10'-6"	(2) 2X10
10'-0" – 12'-6"	(2) 2X12

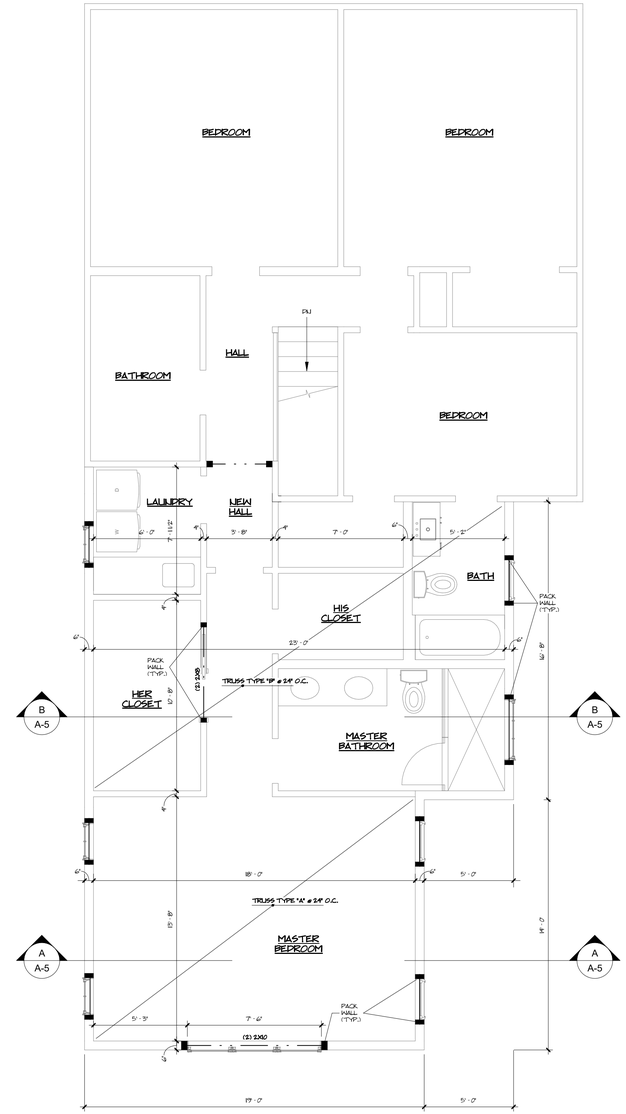

SECOND FLOOR FRAMING PLAN
1/4" = 1'-0"

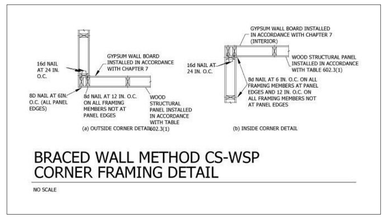

BRACED WALL METHOD CS-WSP
CORNER FRAMING DETAIL

NO SCALE

DATE: 4/17/24
REVISION:

NOT FOR CONSTRUCTION

ESSI RESIDENCE
1246 Manor Park Ave. Lakewood, Ohio 44107

ARCHITECTS, C.A. McGETTRICK, LLC
14551 Madison Ave. Lakewood, Ohio 44107 216-227-0700 FAX: 216-227-0712

COMMISSION NO:
22027

CHARLES MCGETTRICK JR. #77596
EXPIRATION DATE: 12/31/2024

A-3

SOUTH ELEVATION
1/4" = 1'-0"

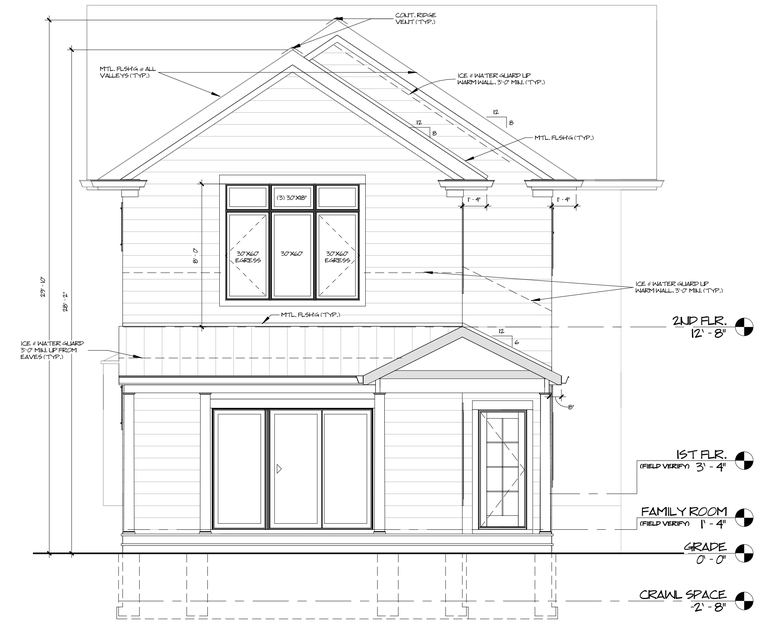

WEST ELEVATION
1/4" = 1'-0"

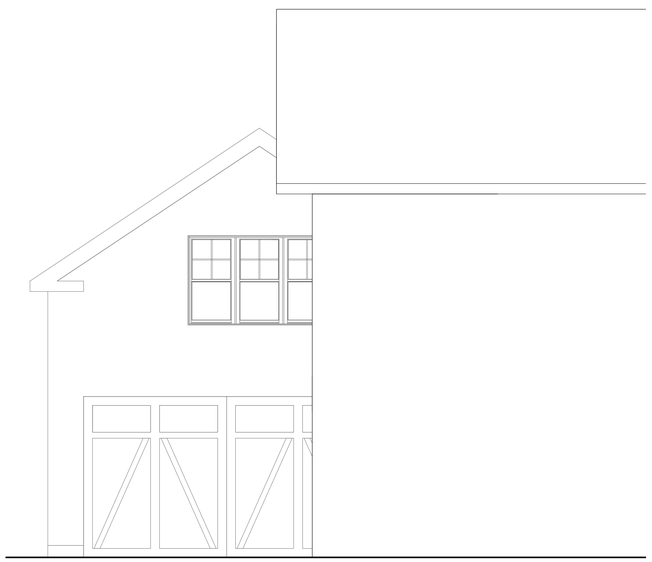

PARTIAL EAST ELEVATION
1/4" = 1'-0"

NORTH ELEVATION
1/4" = 1'-0"

DATE: 4/17/24
REVISION:

NOT FOR CONSTRUCTION

ESSI RESIDENCE
1246 Manor Park Ave. Lakewood, Ohio 44107

ARCHITECTS, C.A. McGETTRICK, LLC
14551 Madison Ave. Lakewood, Ohio 44107 216-227-0700 FAX: 216-227-0712

COMMISSION NO:
22027

CHARLES MCGETTRICK JR. #77595
EXPIRATION DATE: 12/31/2024

A-4

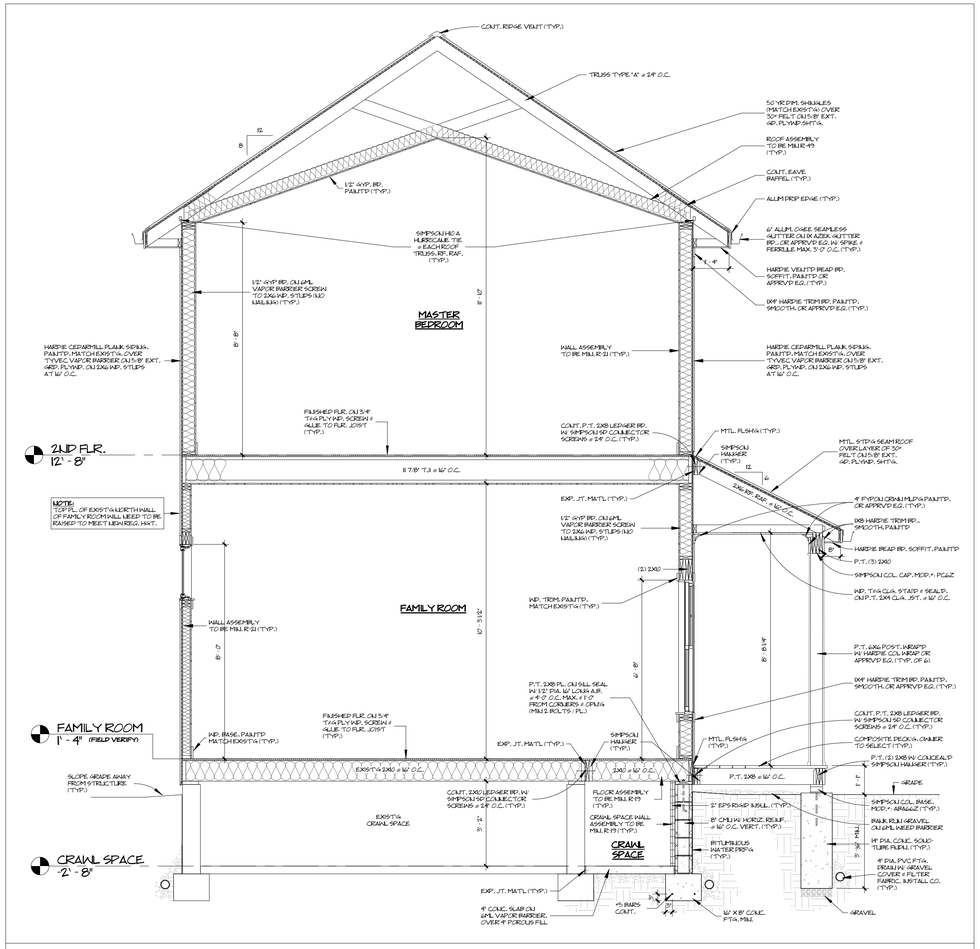

SECTION A
3/8" = 1'-0"

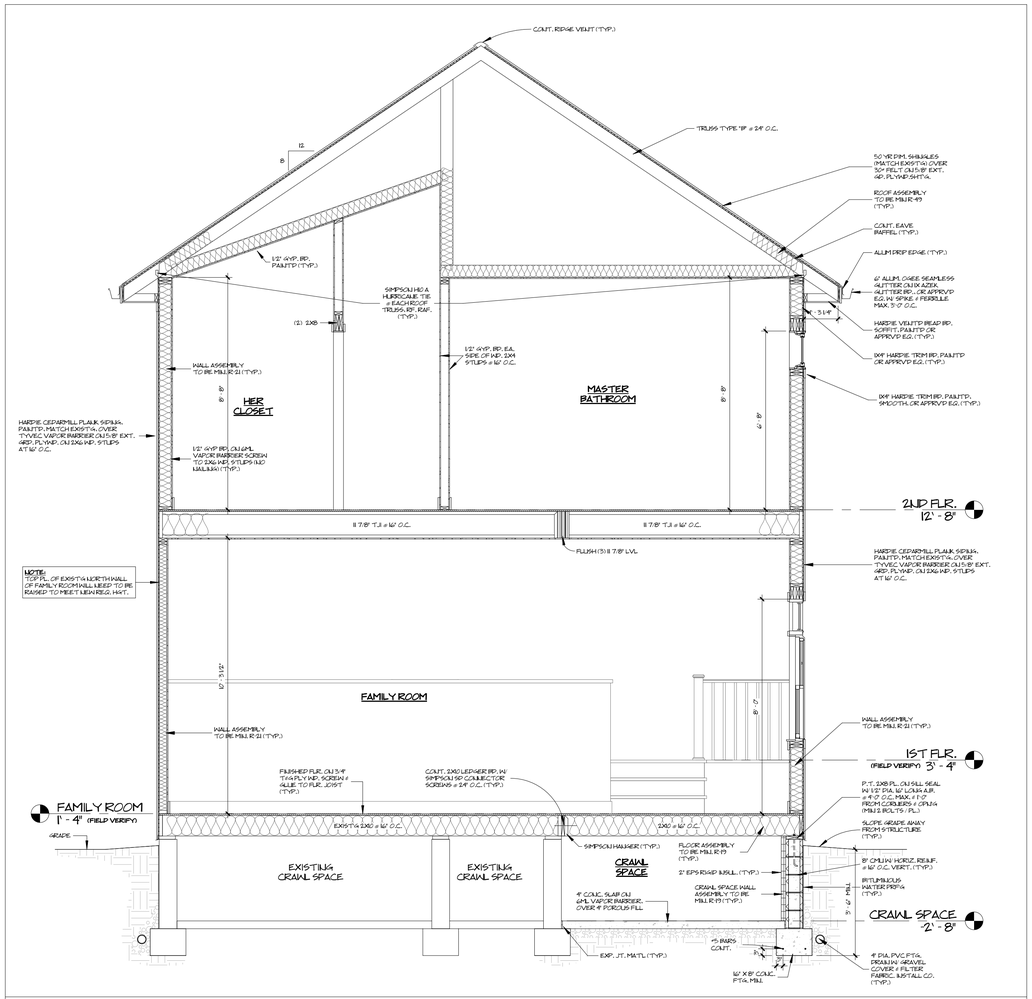

SECTION B
3/8" = 1'-0"

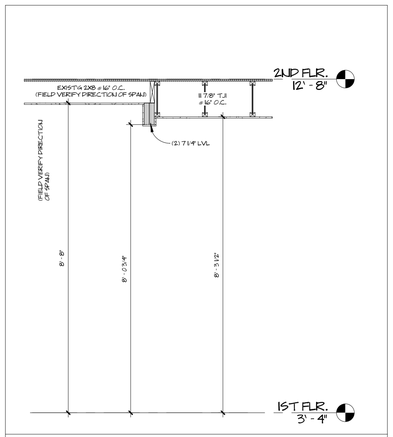

DETAIL 1
1/2" = 1'-0"

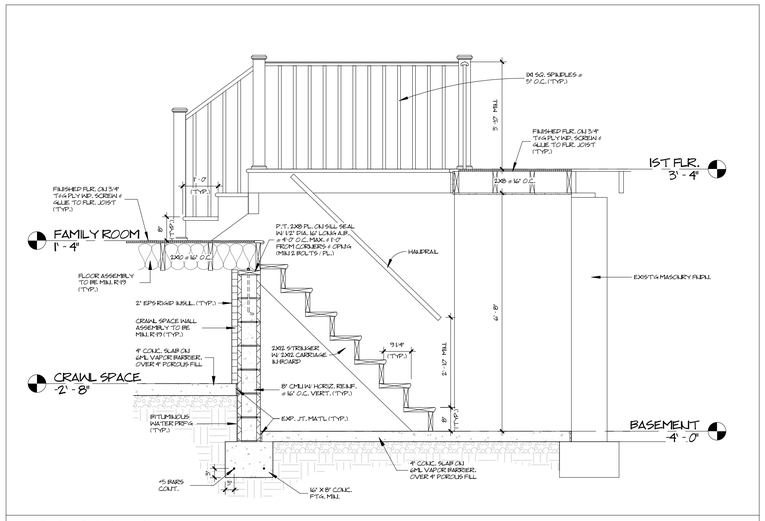

DETAIL 2
1/2" = 1'-0"

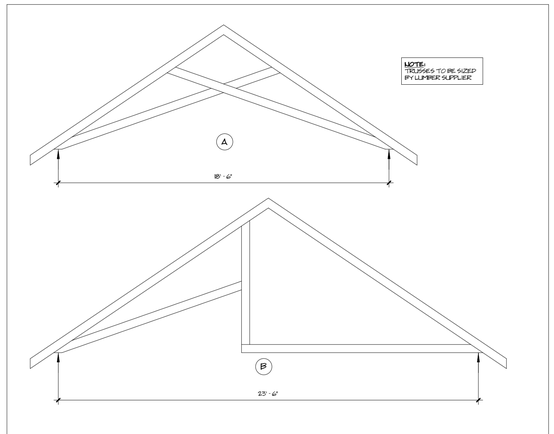

TRUSS DIAGRAM
1/4" = 1'-0"

DATE: 4/17/24

REVISION:

NOT FOR CONSTRUCTION

ESSI RESIDENCE
1246 Manor Park Ave. Lakewood, Ohio 44107

ARCHITECTS, C.A. McGETTRICK, LLC
14551 Madison Ave. Lakewood, Ohio 44107 216-227-0700 FAX: 216-227-0712

COMMISSION NO:
22027

CHARLES MCGETTRICK JR. #775916
EXPIRATION DATE: 12/31/2024

A-5

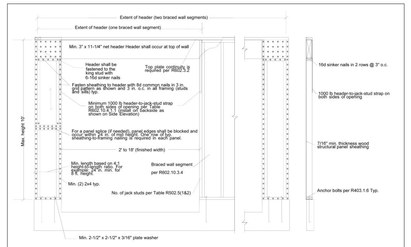

(PFG) PORTAL FRAME AT GARAGE

N.T.S.

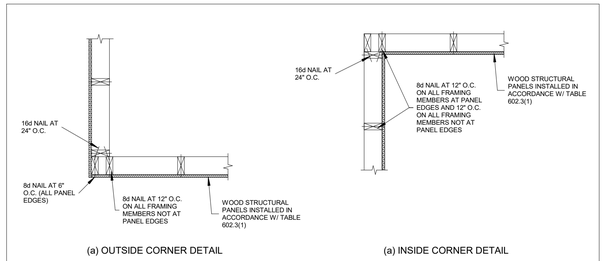

(a) OUTSIDE CORNER DETAIL

(a) INSIDE CORNER DETAIL

BRACED WALL METHOD CS-WSP
CORNER FRAMING DETAIL

N.T.S.

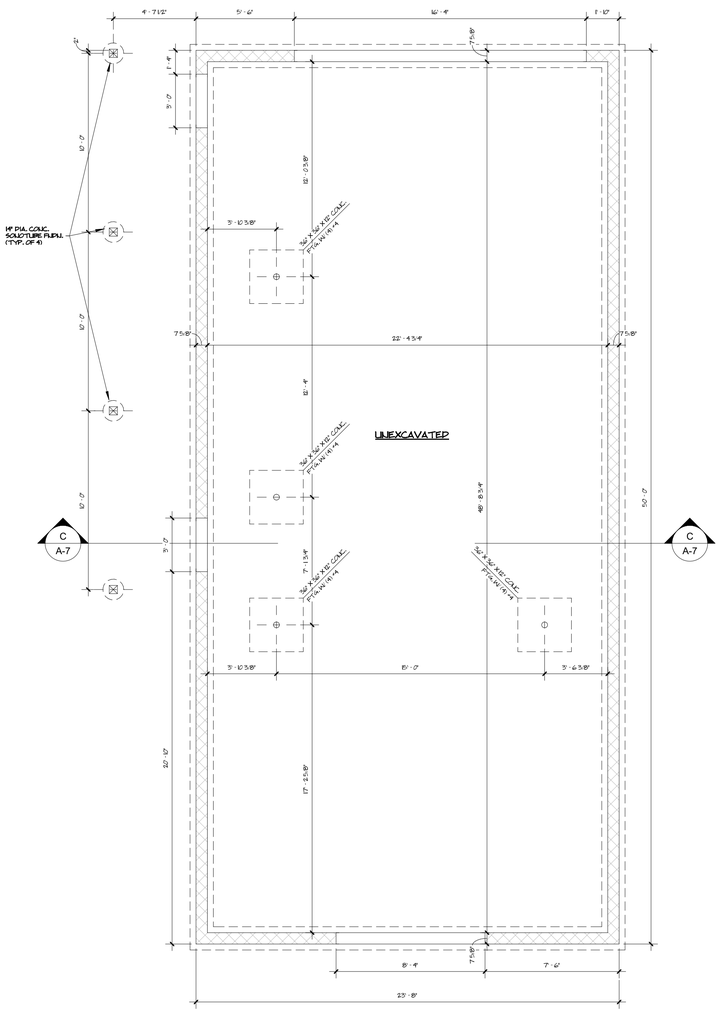

GARAGE FOUNDATION PLAN
1/4" = 1'-0"

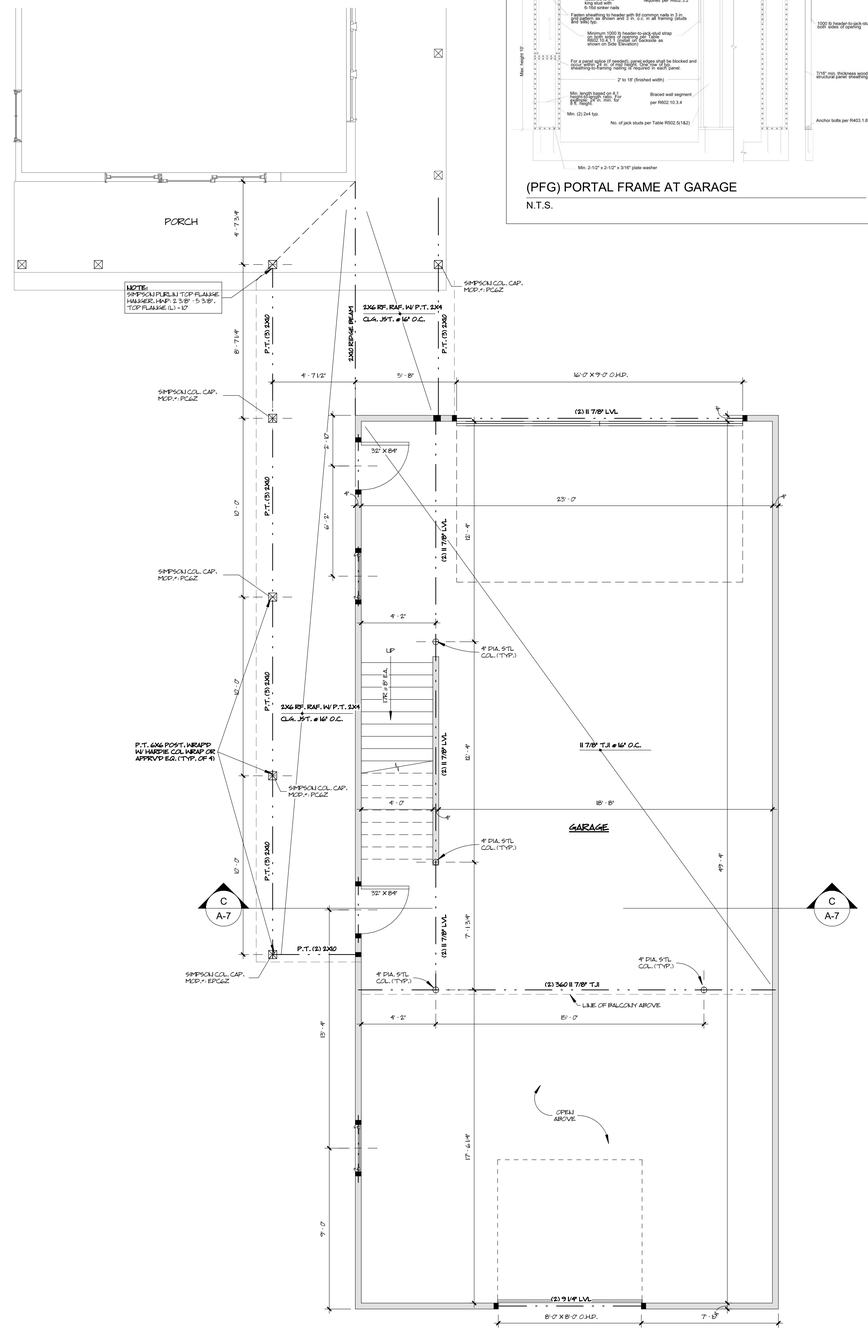

GARAGE PLAN
1/4" = 1'-0"

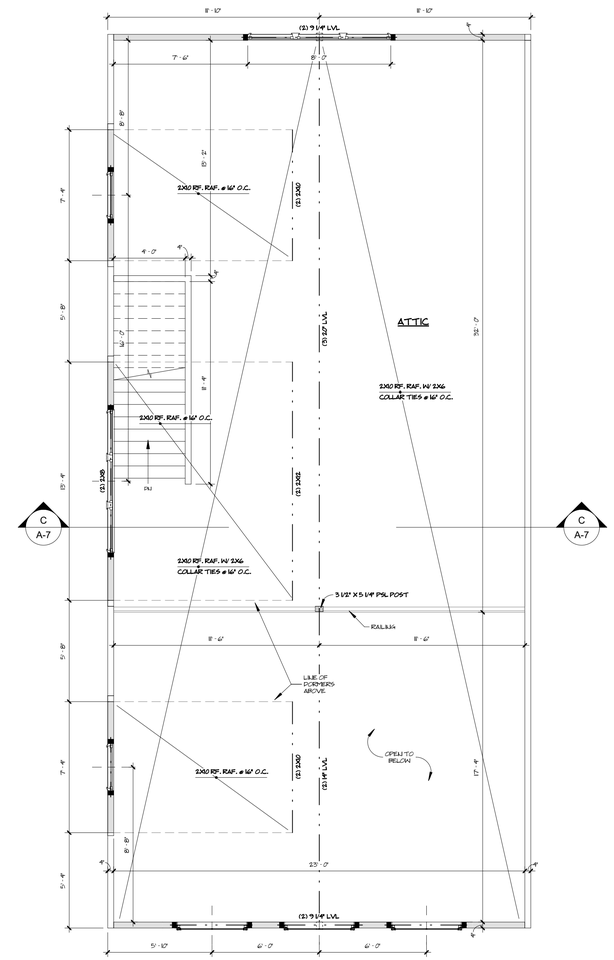

GARAGE ATTIC
1/4" = 1'-0"

DATE: 4/17/24

REVISION:

NOT FOR CONSTRUCTION

ESSI RESIDENCE
1246 Manor Park Ave. Lakewood, Ohio 44107
ARCHITECTS, C.A. McGETTRICK, LLC
14551 Madison Ave. Lakewood, Ohio 44107 216-227-0700 FAX: 216-227-0712

COMMISSION NO:
22027

CHARLES MCGETTRICK JR. #77595
EXPIRATION DATE: 12/31/2024

A-6

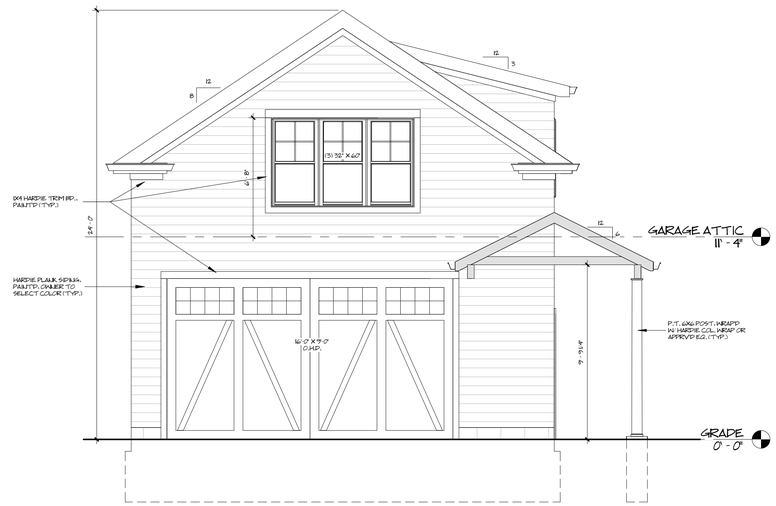

GARAGE EAST ELEVATION
1/4" = 1'-0"

GARAGE NORTH ELEVATION
1/4" = 1'-0"

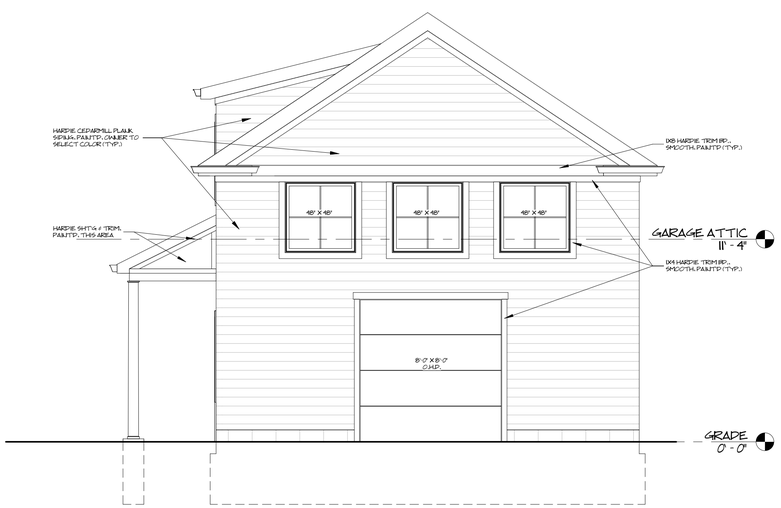

GARAGE WEST ELEVATION
1/4" = 1'-0"

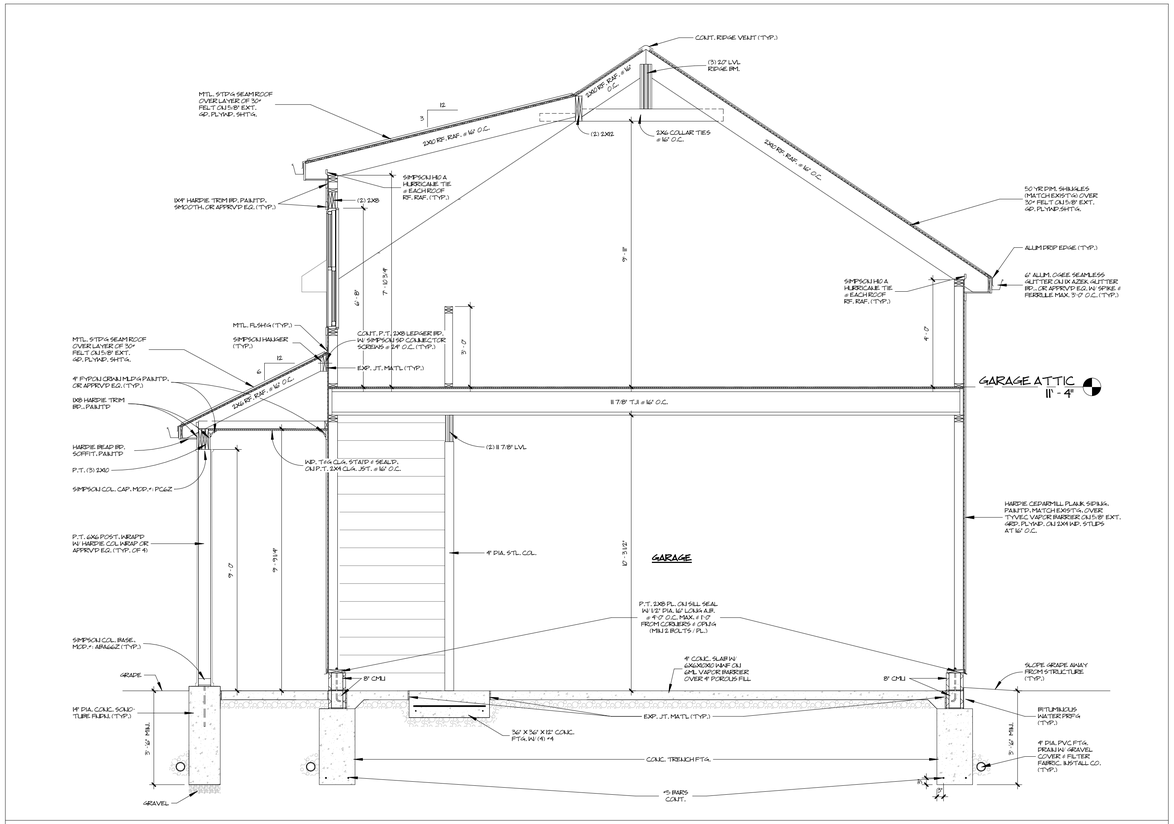

SECTION C
3/8" = 1'-0"

DATE: 4/17/24
REVISION:

NOT FOR CONSTRUCTION

ESSI RESIDENCE
1246 Manor Park Ave. Lakewood, Ohio 44107

ARCHITECTS, C.A. McGETTRICK, LLC
14551 Madison Ave. Lakewood, Ohio 44107 216-227-0700 FAX: 216-227-0712

COMMISSION NO:
22027
CHARLES MCGETTRICK JR. #77595
EXPIRATION DATE: 12/31/2024

A-7

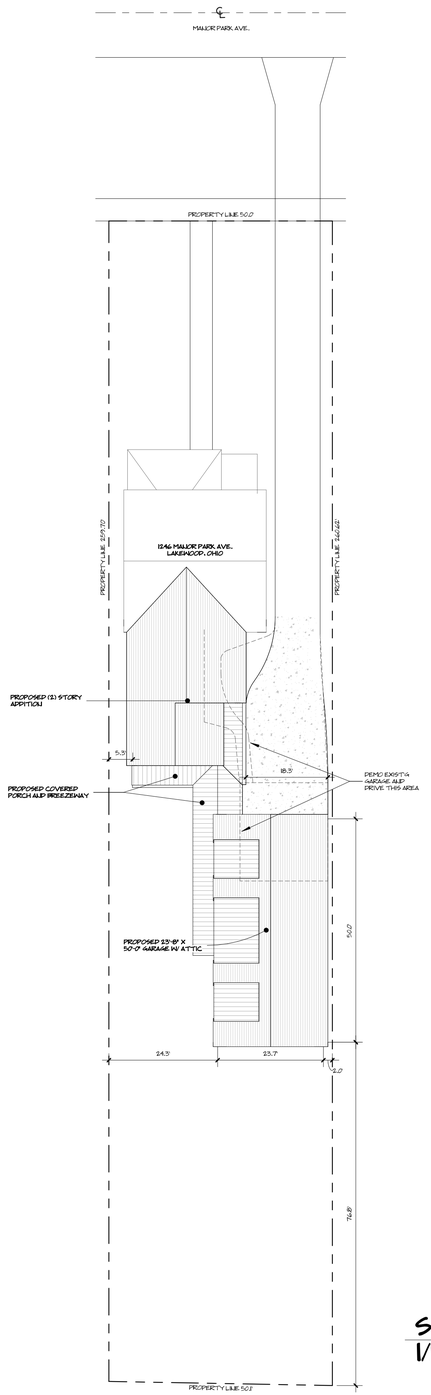

SITE PLAN
1/16" = 1'-0"

DATE: 4/17/24
REVISION:

NOT FOR CONSTRUCTION

ESSI RESIDENCE
1246 Manor Park Ave. Lakewood, Ohio 44107

ARCHITECTS, C.A. McGETTRICK, LLC
14551 Madison Ave. Lakewood, Ohio 44107 216-227-0700 FAX: 216-227-0712

COMMISSION NO:
22027

CHARLES MCGETTRICK JR. #77595
EXPIRATION DATE: 12/31/2024

SP

1246
GILLMORE SECURITY

TACOMA
TRD 4X4 SPORT

BOARD OF BUILDING STANDARDS
ARCHITECTURAL REVIEW BOARD
SIGN REVIEW BOARD

12650 Detroit Avenue ● (216) 529-6630 ● FAX (216) 529-5907 ● www.lakewoodoh.gov

Application Cover Page

Docket No.: 05-42-24

Permit No.: BBS24-000043

Applicant Name: James E. Nagy, GMJ Acquisitions

Project Address: 1605 St. Charles Ave.

Project Name: n/a

Project: Applicant proposes renovation of an existing house.

GMT REALIS/TRANSLITED by
James Kelly, MSH-MLS

Proposed House Renovations
1605 St. Charles, Lakewood OH

Date: 4.15.2024

1 FRONT VIEW
HOUSE ELEVATION
SCALE: 1/2" = 1'-0"

mark johnson
design. solutions

1612 Blossom Park Ave.
Lakewood, OH 44107

PROPERTY AT:
1605 ST. CHARLES
LAKEWOOD OHIO

CONSULTANTS

SHEET TITLE
FRONT OF HOUSE AND
SIDE PORCH
RENOVATION

NO.	DATE	DESCRIPTION

PROJECT NO: 2024-1.8
DRAWN BY: MJ
CHK'D BY: MJ
SHEET NO.:

A-1

ST CHARLES REMODEL 2024.DWG

PORCH SIDE VIEW
2A HOUSE ELEVATION
SCALE: 1/2" = 1'-0"

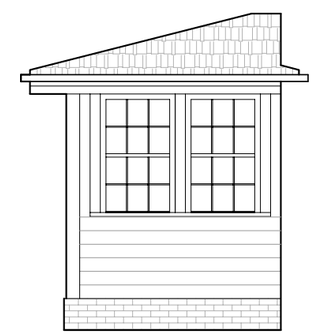

PORCH BACK VIEW
2B PORCH ELEVATION
SCALE: 1/2" = 1'-0"

ST CHARLES REMODEL 2024.DWG

mark johnson
design. solutions

1612 Blossom Park Ave.
Lakewood, OH 44107

PROPERTY AT:
1605 ST. CHARLES
LAKEWOOD OHIO

CONSULTANTS

SHEET TITLE
FRONT OF HOUSE AND SIDE PORCH RENOVATION

NO.	DATE	DESCRIPTION

PROJECT NO: 2024-1.8
DRAWN BY: MJ
CHK'D BY: MJ
SHEET NO.:

A-2

DRIVE SIDE VIEW
3 HOUSE ELEVATION
SCALE: 1/2" = 1'-0"

ST CHARLES REMODEL 2024.DWG

mark johnson
design. solutions
1612 Blossom Park Ave.
Lakewood, OH 44107

PROPERTY AT:
1605 ST. CHARLES
LAKEWOOD OHIO

CONSULTANTS

SHEET TITLE
KITCHEN RENOVATION
ELEVATION

NO	DATE	DESCRIPTION

PROJECT NO: 2024-1.8
DRAWN BY: MJ
CHK'D BY: MJ
SHEET NO.:

A-3

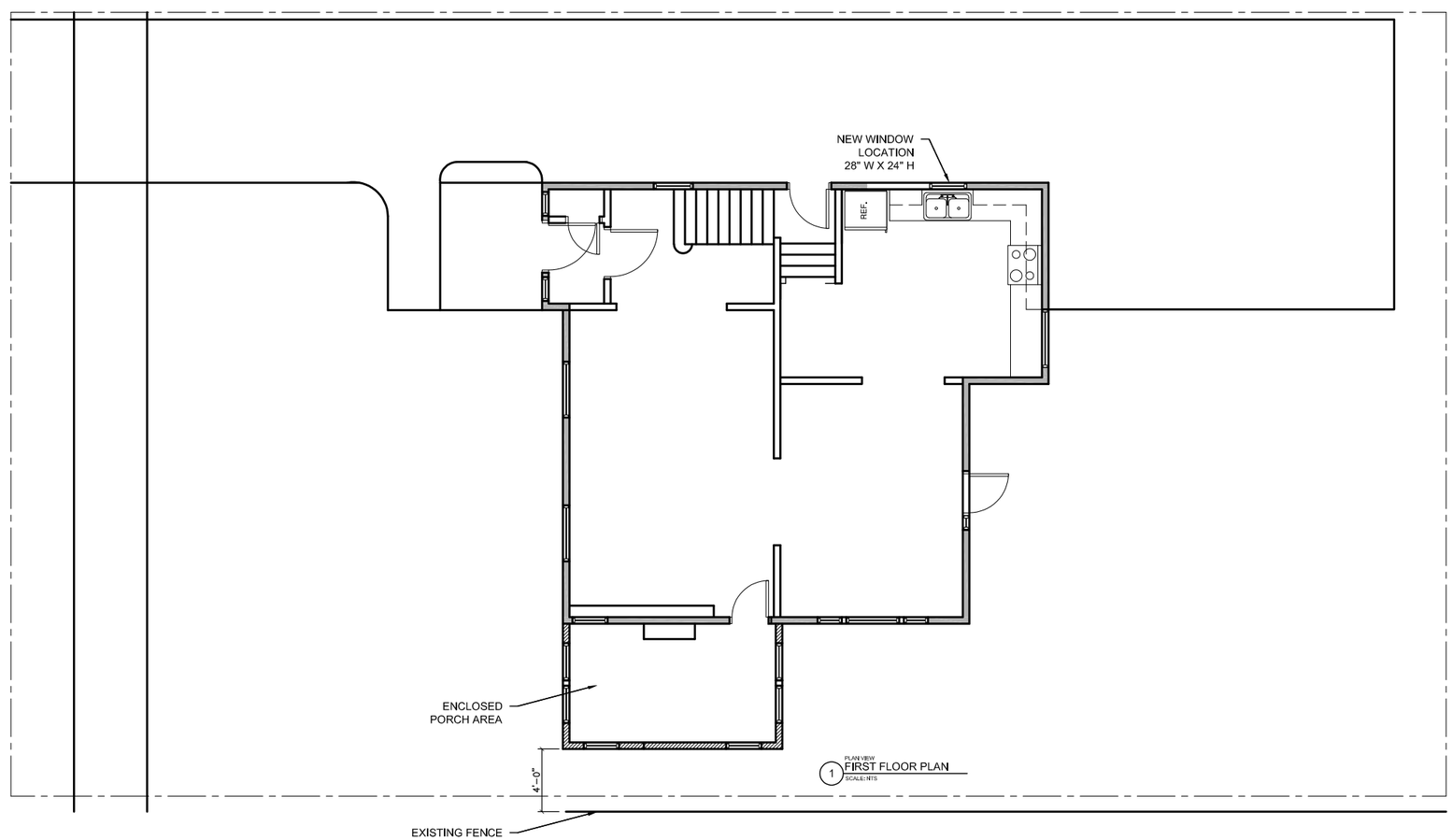

1 PLAN VIEW
FIRST FLOOR PLAN
SCALE: NTS

ST CHARLES REMODEL 2024.DWG

mark johnson design. solutions

1612 Blossom Park Ave.
Lakewood, OH 44107

PROPERTY AT:
1605 ST. CHARLES
LAKEWOOD OHIO

CONSULTANTS

SHEET TITLE
PLAN VIEW

NO	DATE	DESCRIPTION

PROJECT NO: 2024-1.8
DRAWN BY: MJ
CHK'D BY: MJ
SHEET NO.:

A-4

FIBERGLASS REPLACEMENT COLUMNS - MATCH EXISTING DIMENSIONS

REPLACEMENT SHUTTERS

EXISTING FRONT ELEVATION

EXISTING KITCHEN SIDE ELEVATIONS

EXISTING PORCH ELEVATIONS

NEIGHBOR HOUSE SOUTH

NEIGHBOR HOUSE NORTH

BOARD OF BUILDING STANDARDS
ARCHITECTURAL REVIEW BOARD
SIGN REVIEW BOARD

12650 Detroit Avenue ● (216) 529-6630 ● FAX (216) 529-5907 ● www.lakewoodoh.gov

Application Cover Page

Docket No.: 05-43-24

Permit No.: BBS24-000044

Applicant Name: Brandon Young, Young Design Studio LLC

Project Address: 2020 Arthur Ave.

Project Name: n/a

Project: Applicant proposes renovation of an existing house with a two-story addition on the south side.

SITE DATA
LAND USE: 5100 R-1 SINGLE FAMILY RESIDENTIAL
PARCEL #: 314-14-061
ZONING DISTRICT: CRL - RETAIL - LOCAL
LAND AREA: 10,500 SF
AREA OF GARAGE: 360 SF

EXISTING FIRST FLOOR BUILDING AREA: 1,007 SF
EXISTING FIRST FLOOR LOT COVERAGE AREA
INCLUDING GARAGE: 1,367 SF
EXISTING SECOND FLOOR AREA: 780 SF
FIRST FLOOR ADDITION AREA: 90 SF
SECOND FLOOR ADDITION AREA: 270 SF
TOTAL FIRST FLOOR BUILDING AREA: 1,097 SF
TOTAL SECOND FLOOR BUILDING AREA: 1,050 SF

EXISTING LOT COVERAGE: 13.01%
PROPOSED LOT COVERAGE: 13.87%

PROJECT SUMMARY
NEW PRIMARY 2-STORY ADDITION AT SIDE OF EXISTING 2-STORY SINGLE FAMILY HOME. EXISTING 1-STORY COVERED PORCH AT SIDE OF HOME TO BE DEMOLISHED. INTERIOR ALTERATION TO FIRST AND SECOND FLOORS.

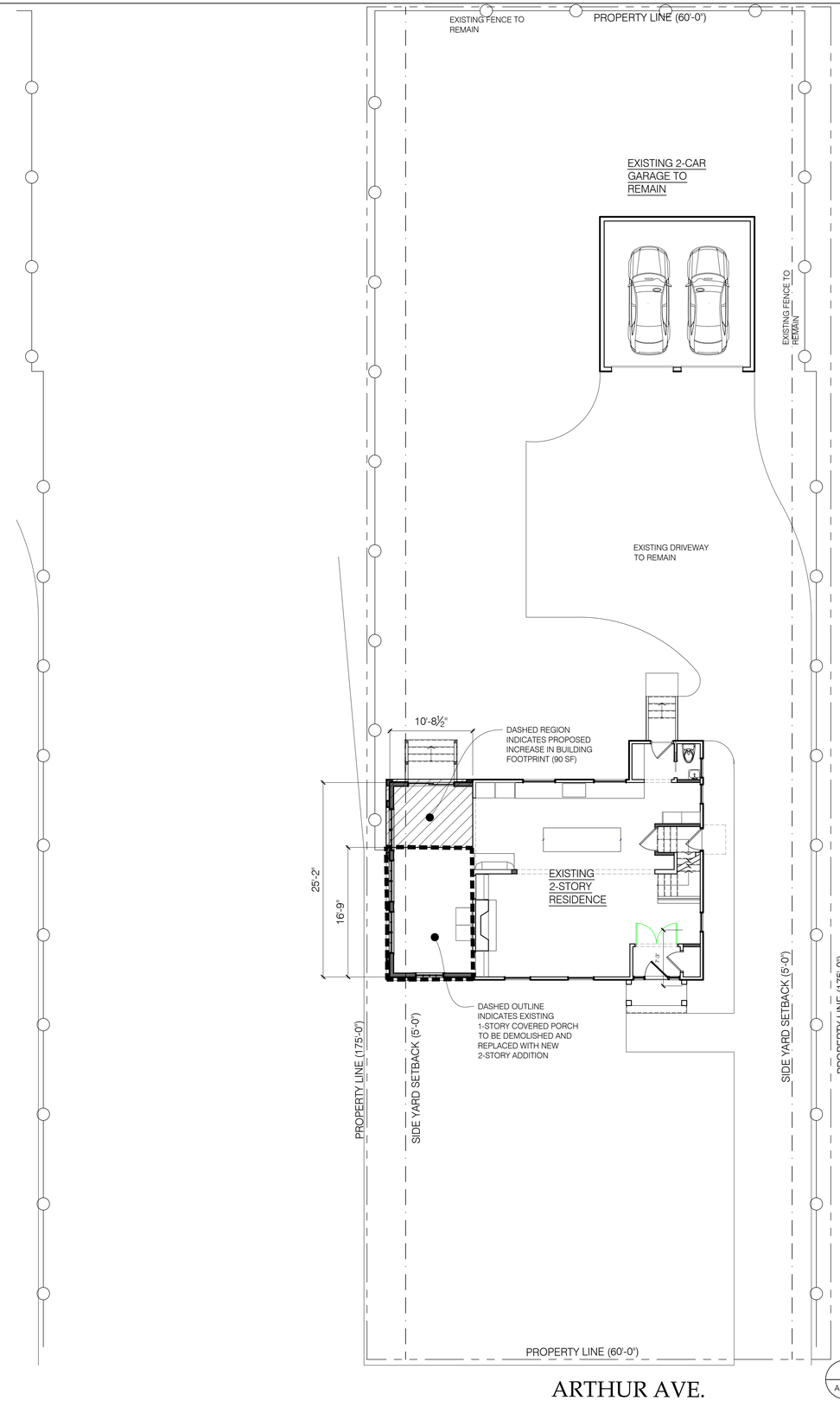

1 AS-01 PROPOSED SITE PLAN
SCALE: 1/8" = 1'-0"

Seal:
STATE OF OHIO
BRANDON J. YOUNG
9985
REGISTERED ARCHITECT
NOT FOR CONSTRUCTION

General Notes:

ISSUES:	DATE:
ABR	04-17-24

YOUNG DESIGN STUDIO
15614 Detroit Ave.
Lakewood, OH 44107
www.youngdesignstudio.com
p. 216.616.9212
Architecture | Interiors | Urban Design

2020 Arthur Residential Addition

2020 Arthur Ave.
Lakewood, Ohio 44107

Drawing Title:
SITE PLAN

Drawn by: BEY
Date: 04-08-2024
Checked by:
Approved:
Job Number:
Drawing Number: AS-01

File Name:

c:\volumes\yds\server\projects\24-040 - 2020 arthur ave lakewood addition\ch01.dwg

GENERAL NOTES:

1. GENERAL CONTRACTOR & ALL SUBCONTRACTORS TO FIELD VERIFY ALL EXISTING CONDITIONS, EXAMINE THE ENTIRE SITE AND THE CONSTRCTION DOCUMENTS TO ENSURE THEIR KNOWLEDGE OF ALL RELEVANT EXISTING FIELD CONDITIONS AFFECTING THE SCOPE OF WORK PRIOR TO PRICING. ANY DESCREPANCIES OR CONFLICTS BETWEEN THE ARCHITECTURAL AND ENGINEERING DOCUMENTS AND FIELD CONDITIONS SHALL BE CLARIFIED WITH THE ARCHITECT AND ENGINEER BEFORE INITIATING WORK.
2. IT IS THE RESPONSIBILITY OF THE GENERAL CONTRACTOR TO OBTAIN ACCURATE FIELD MEASUREMENTS AND VERIFY ALL DIMENSIONS AND TO PROVIDE SHOP DRAWINGS TO ENSURE AN ACCURATE FIT. NO CLAIM FOR EXTRA COMPENSATION WILL BE ALLOWED BASED ON FAILURE TO IDENTIFY EXISTING FIELD CONDITIONS.
3. GENERAL CONTRACTOR SHALL REPORT TO THE ARCHITECT ANY ERRORS, INCONSISENSCIES OR OMMISSIONS THEY MAY DISCOVER PRIOR TO THE COMMENCING OF WORK WITH THE REQUEST FOR INFORMATION (RFI) FORM.
4. DIMENSIONS TAKE PRECEDENCE OVER DRAWINGS. ALL DIMENSIONS ARE FROM FACE OF STUD (TYPICAL UNLESS OTHERWISE NOTED). - DO NOT SCALE.
5. ALL DOOR ROUGH OPENINGS ARE TO BE LOCATED 3" FROM NEAREST WALL AT HINGE SIDE (TYPICAL UNLESS OTHERWISE NOTED).

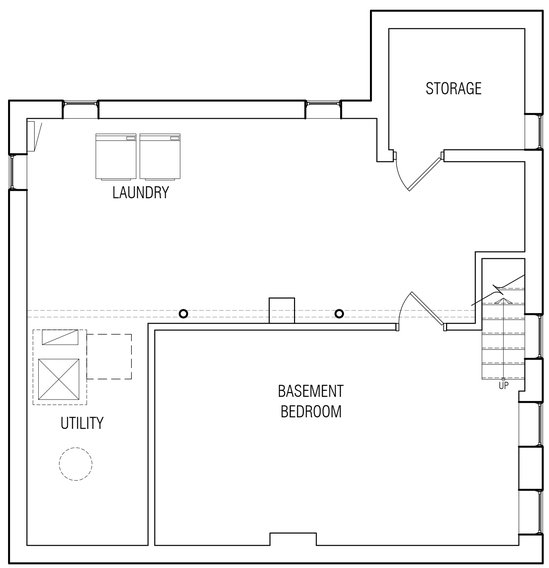

Key

Indicates existing construction to remain

Indicates demolition scope

Demolition Scope of Work Notes

1. Remove existing mechanical electrical and plumbing systems complete
2. All existing glass block windows to remain

1 / AD-01 EXISTING
BASEMENT PLAN
SCALE: 1/4" = 1'-0"

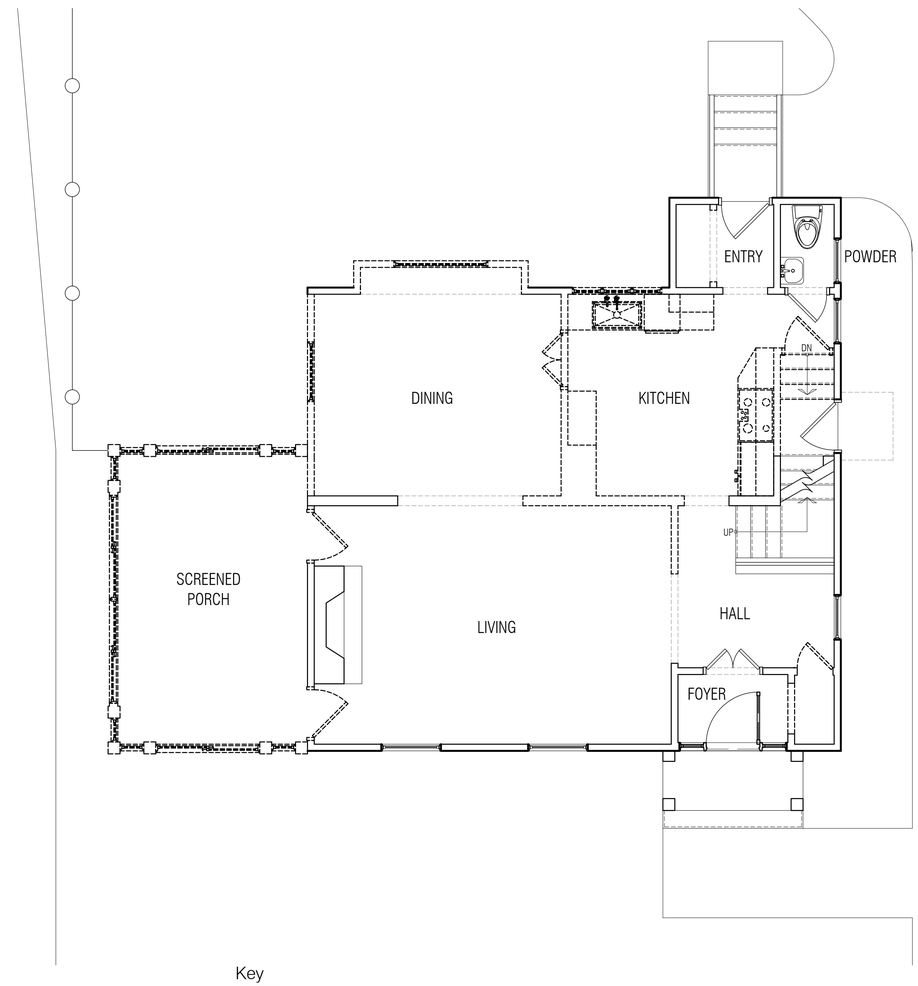

Key

Indicates existing construction to remain

Indicates demolition scope

Demolition Scope of Work Notes

1. All existing hardwood flooring to remain. Patch and replace as needed.

2 / AD-01 PROPOSED
FIRST FLOOR DEMOLITION PLAN
SCALE: 1/4" = 1'-0"

Seal:

STATE OF OHIO
BRANDON
YOUNG
6/17/2024
0069985
REGISTERED ARCHITECT

NOT FOR CONSTRUCTION

General Notes:

ISSUES:	DATE:
ABR	04-17-24

YOUNG DESIGN STUDIO
15614 Detroit Ave.
Lakewood, OH 44107
www.youngdesignstudio.com
p. 216.616.9212
Architecture | Interiors | Urban Design

2020 Arthur Residential Addition

2020 Arthur Ave.
Lakewood, Ohio 44107

Drawing Title:

DEMOLITION PLANS

Drawn by:	Date:
BEY	04-08-2024
Checked by:	Drawing Number:
Approved:	AD-01
Job Number:	

File Name:

c:\volumes\yds\server\projects\24-040 - 2020 arthur ave lakewood addition\ut01.dwg

GENERAL NOTES:

1. GENERAL CONTRACTOR & ALL SUBCONTRACTORS TO FIELD VERIFY ALL EXISTING CONDITIONS, EXAMINE THE ENTIRE SITE AND THE CONSTRCTION DOCUMENTS TO ENSURE THEIR KNOWLEDGE OF ALL RELEVANT EXISTING FIELD CONDITIONS AFFECTING THE SCOPE OF WORK PRIOR TO PRICING. ANY DESCREPANCIES OR CONFLICTS BETWEEN THE ARCHITECTURAL AND ENGINEERING DOCUMENTS AND FIELD CONDITIONS SHALL BE CLARIFIED WITH THE ARCHITECT AND ENGINEER BEFORE INITIATING WORK.

2. IT IS THE RESPONSIBILITY OF THE GENERAL CONTRACTOR TO OBTAIN ACCURATE FIELD MEASUREMENTS AND VERIFY ALL DIMENSIONS AND TO PROVIDE SHOP DRAWINGS TO ENSURE AN ACCURATE FIT. NO CLAIM FOR EXTRA COMPENSATION WILL BE ALLOWED BASED ON FAILURE TO IDENTIFY EXISTING FIELD CONDITIONS.

3. GENERAL CONTRACTOR SHALL REPORT TO THE ARCHITECT ANY ERRORS, INCONSISENSCIES OR OMMISSIONS THEY MAY DISCOVER PRIOR TO THE COMMENCING OF WORK WITH THE REQUEST FOR INFORMATION (RFI) FORM.

4. DIMENSIONS TAKE PRECEDENCE OVER DRAWINGS. ALL DIMENSIONS ARE FROM FACE OF STUD (TYPICAL UNLESS OTHERWISE NOTED). - DO NOT SCALE.

5. ALL DOOR ROUGH OPENINGS ARE TO BE LOCATED 3" FROM NEAREST WALL AT HINGE SIDE (TYPICAL UNLESS OTHERWISE NOTED).

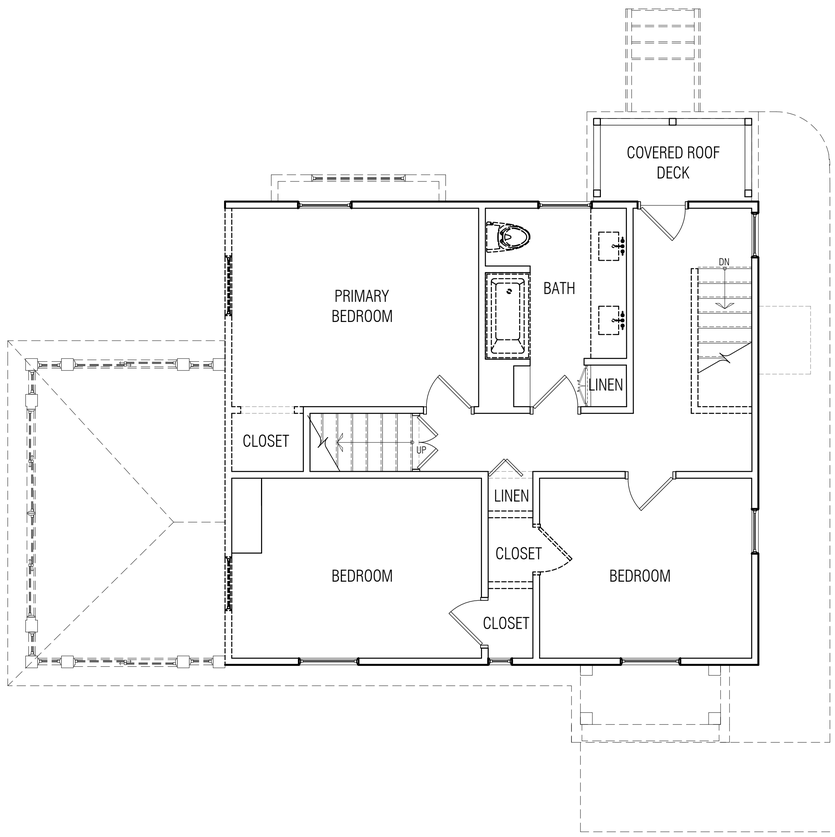

Key

Indicates existing construction to remain

Indicates demolition scope

Demolition Scope of Work Notes

1. Existing subfloor to remain. Remove all carpet.

1 / AD-02 PROPOSED
SECOND FLOOR DEMOLITION PLAN
SCALE: 1/4" = 1'-0"

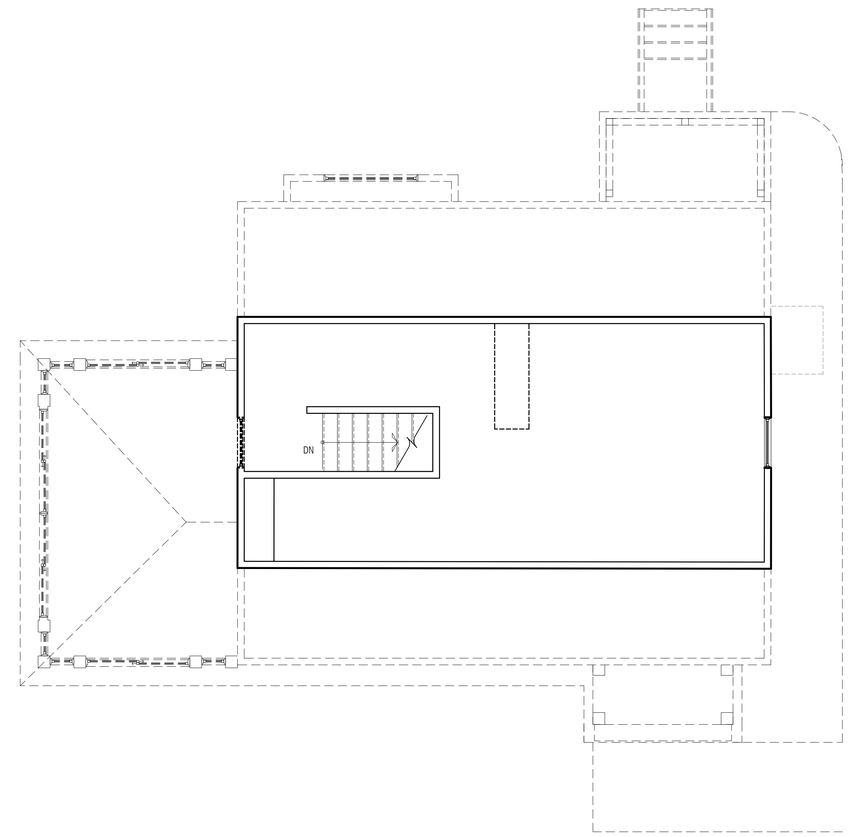

Key

Indicates existing construction to remain

Indicates demolition scope

Demolition Scope of Work Notes

1. Brace chimney as needed for demolition below.

2 / AD-02 PROPOSED
ATTIC DEMOLITION PLAN
SCALE: 1/4" = 1'-0"

Seal:

STATE OF OHIO
BRANDON
YOUNG
6[illegible]985
REGISTERED ARCHITECT

NOT FOR CONSTRUCTION

General Notes:

ISSUES:	DATE:
ABR	04-17-24

YOUNG DESIGN STUDIO

15614 Detroit Ave.
Lakewood, OH 44107

www.youngdesignstudio.com
p. 216.616.9212

Architecture | Interiors | Urban Design

2020 Arthur Residential Addition

2020 Arthur Ave.
Lakewood, Ohio 44107

Drawing Title:

DEMOLITION PLANS

Drawn by:	Date:
BEY	04-08-2024
Checked by:	Drawing Number:
Approved:	AD-02
Job Number:	

File Name:

c:\volumes\yds\server\projects\24-040 - 2020 arthur ave lakewood addition\ut01.dwg

GENERAL NOTES:

1. GENERAL CONTRACTOR & ALL SUBCONTRACTORS TO FIELD VERIFY ALL EXISTING CONDITIONS, EXAMINE THE ENTIRE SITE AND THE CONSTRCTION DOCUMENTS TO ENSURE THEIR KNOWLEDGE OF ALL RELEVANT EXISTING FIELD CONDITIONS AFFECTING THE SCOPE OF WORK PRIOR TO PRICING. ANY DESCREPANCIES OR CONFLICTS BETWEEN THE ARCHITECTURAL AND ENGINEERING DOCUMENTS AND FIELD CONDITIONS SHALL BE CLARIFIED WITH THE ARCHITECT AND ENGINEER BEFORE INITIATING WORK.

2. IT IS THE RESPONSIBILITY OF THE GENERAL CONTRACTOR TO OBTAIN ACCURATE FIELD MEASUREMENTS AND VERIFY ALL DIMENSIONS AND TO PROVIDE SHOP DRAWINGS TO ENSURE AN ACCURATE FIT. NO CLAIM FOR EXTRA COMPENSATION WILL BE ALLOWED BASED ON FAILURE TO IDENTIFY EXISTING FIELD CONDITIONS.

3. GENERAL CONTRACTOR SHALL REPORT TO THE ARCHITECT ANY ERRORS, INCONSISENSCIES OR OMMISSIONS THEY MAY DISCOVER PRIOR TO THE COMMENCING OF WORK WITH THE REQUEST FOR INFORMATION (RFI) FORM.

4. DIMENSIONS TAKE PRECEDENCE OVER DRAWINGS. ALL DIMENSIONS ARE FROM FACE OF STUD (TYPICAL UNLESS OTHERWISE NOTED). - DO NOT SCALE.

5. ALL DOOR ROUGH OPENINGS ARE TO BE LOCATED 3" FROM NEAREST WALL AT HINGE SIDE (TYPICAL UNLESS OTHERWISE NOTED).

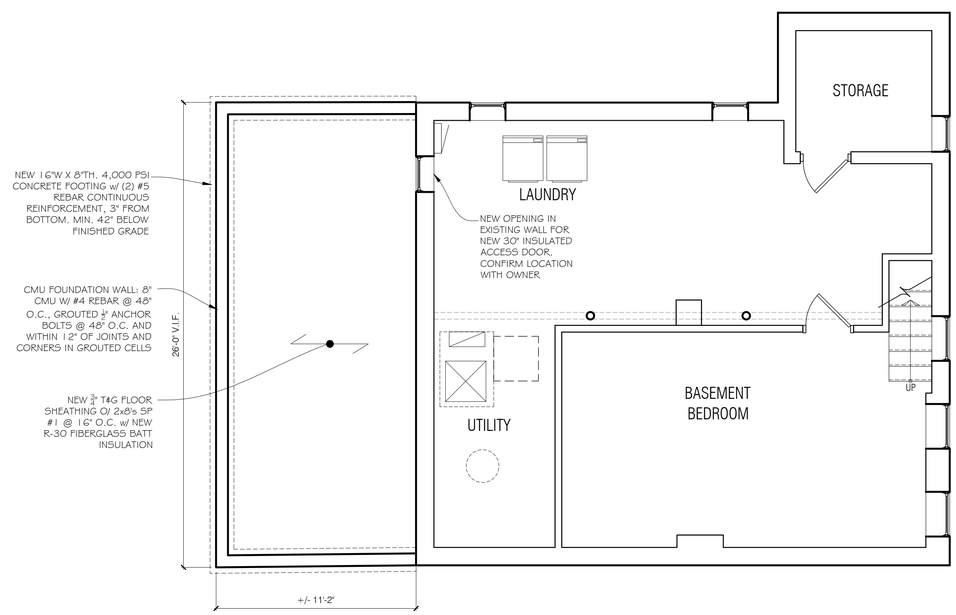

1 A1-01 PROPOSED FOUNDATION / FIRST FLOOR FRAMING PLAN
SCALE: 1/4" = 1'-0"

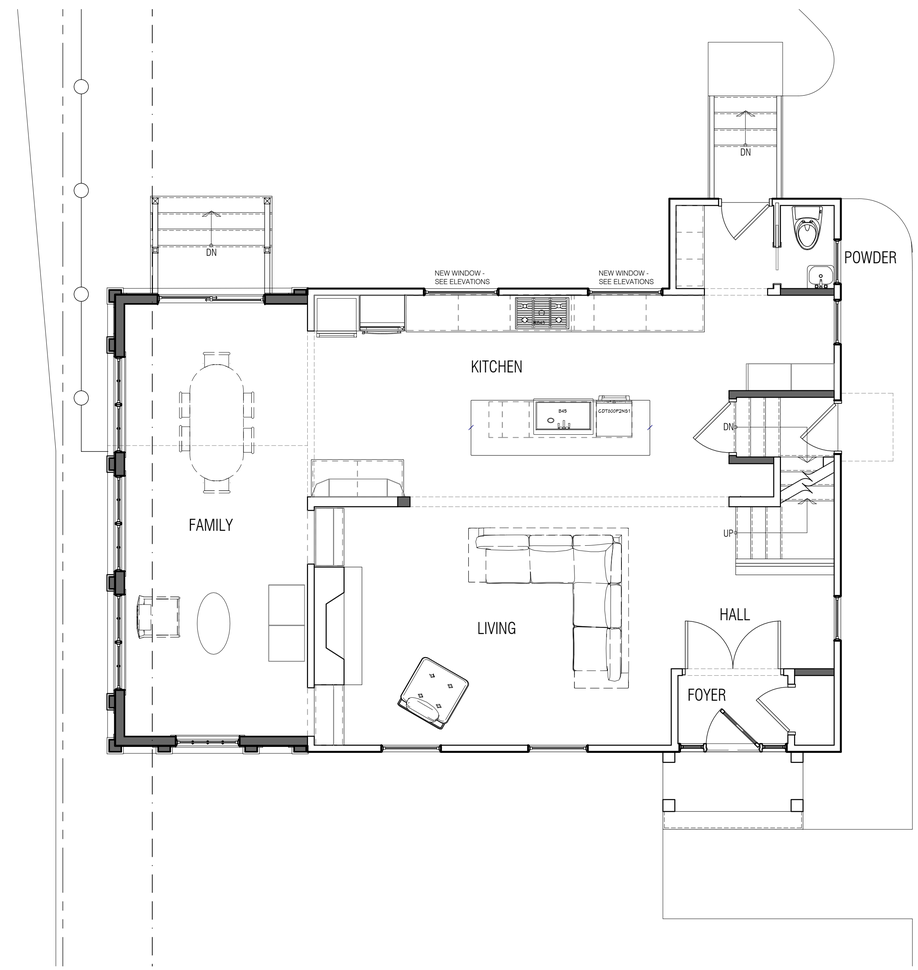

2 A1-01 PROPOSED FIRST FLOOR PLAN
SCALE: 1/4" = 1'-0"

Seal:

STATE OF OHIO
BRANDON YOUNG
6985
REGISTERED ARCHITECT
NOT FOR CONSTRUCTION

General Notes:

ISSUES:	DATE:
ABR	04-17-24

YOUNG DESIGN STUDIO
15614 Detroit Ave.
Lakewood, OH 44107
www.youngdesignstudio.com
p. 216.616.9212
Architecture | Interiors | Urban Design

2020 Arthur Residential Addition

2020 Arthur Ave.
Lakewood, Ohio 44107

Drawing Title:

CONSTRUCTION PLANS

Drawn by:	Date:
BEY	04-08-2024
Checked by:	Drawing Number:
Approved:	A1-01
Job Number:	

File Name:

c:\volumes\yds\server\projects\24-040 - 2020 arthur ave lakewood addition\pt01.dwg

GENERAL NOTES:

1. GENERAL CONTRACTOR & ALL SUBCONTRACTORS TO FIELD VERIFY ALL EXISTING CONDITIONS, EXAMINE THE ENTIRE SITE AND THE CONSTRCTION DOCUMENTS TO ENSURE THEIR KNOWLEDGE OF ALL RELEVANT EXISTING FIELD CONDITIONS AFFECTING THE SCOPE OF WORK PRIOR TO PRICING. ANY DESCREPANCIES OR CONFLICTS BETWEEN THE ARCHITECTURAL AND ENGINEERING DOCUMENTS AND FIELD CONDITIONS SHALL BE CLARIFIED WITH THE ARCHITECT AND ENGINEER BEFORE INITIATING WORK.

2. IT IS THE RESPONSIBILITY OF THE GENERAL CONTRACTOR TO OBTAIN ACCURATE FIELD MEASUREMENTS AND VERIFY ALL DIMENSIONS AND TO PROVIDE SHOP DRAWINGS TO ENSURE AN ACCURATE FIT. NO CLAIM FOR EXTRA COMPENSATION WILL BE ALLOWED BASED ON FAILURE TO IDENTIFY EXISTING FIELD CONDITIONS.

3. GENERAL CONTRACTOR SHALL REPORT TO THE ARCHITECT ANY ERRORS, INCONSISENSCIES OR OMMISSIONS THEY MAY DISCOVER PRIOR TO THE COMMENCING OF WORK WITH THE REQUEST FOR INFORMATION (RFI) FORM.

4. DIMENSIONS TAKE PRECEDENCE OVER DRAWINGS. ALL DIMENSIONS ARE FROM FACE OF STUD (TYPICAL UNLESS OTHERWISE NOTED). - DO NOT SCALE.

5. ALL DOOR ROUGH OPENINGS ARE TO BE LOCATED 3" FROM NEAREST WALL AT HINGE SIDE (TYPICAL UNLESS OTHERWISE NOTED).

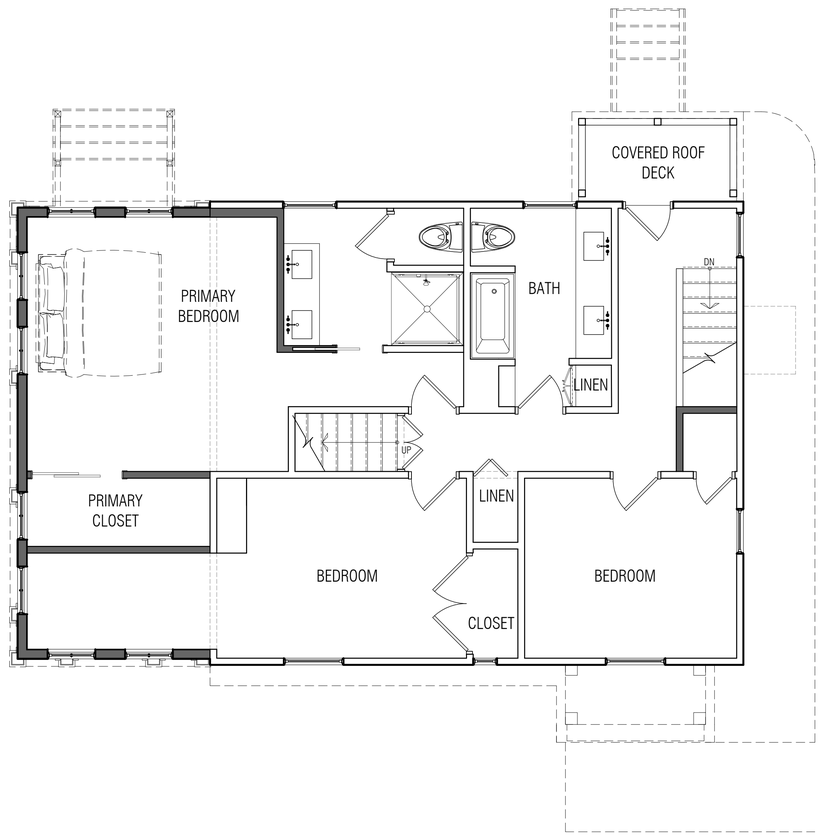

1 A1-02 PROPOSED SECOND FLOOR PLAN
SCALE: 1/4" = 1'-0"

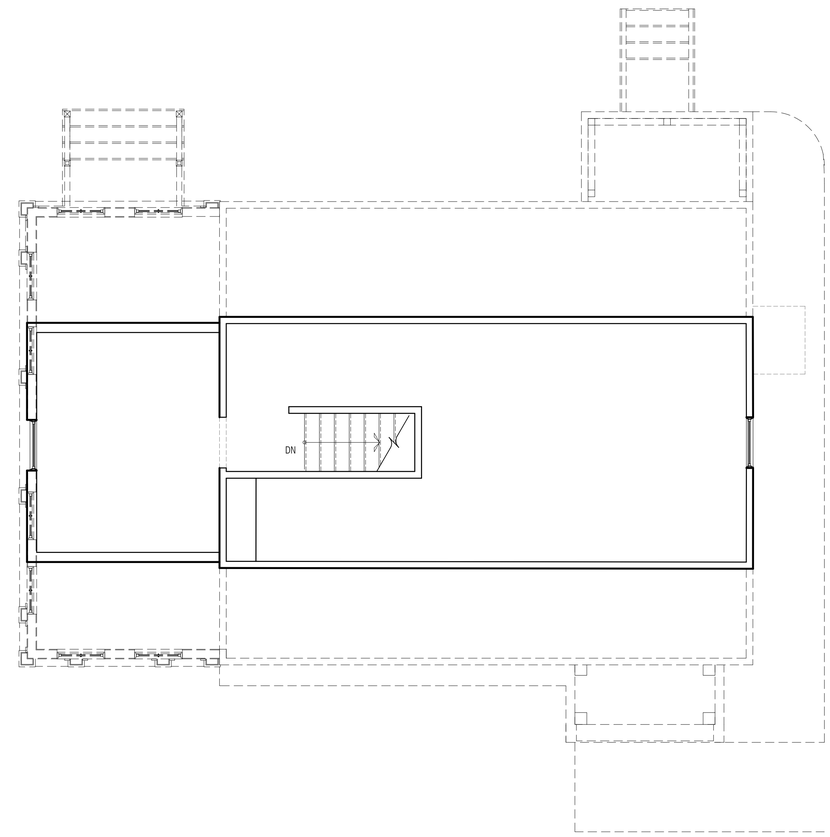

2 A1-02 PROPOSED ATTIC PLAN
SCALE: 1/4" = 1'-0"

Seal:

STATE OF OHIO
BRANDON
YOUNG
6985
REGISTERED ARCHITECT
NOT FOR CONSTRUCTION

General Notes:

ISSUES:	DATE:
ABR	04-17-24

YOUNG DESIGN STUDIO
15614 Detroit Ave.
Lakewood, OH 44107
www.youngdesignstudio.com
p. 216.616.9212
Architecture | Interiors | Urban Design

2020 Arthur Residential Addition

2020 Arthur Ave.
Lakewood, Ohio 44107

Drawing Title:

CONSTRUCTION PLANS

Drawn by:	Date:
BEY	04-08-2024
Checked by:	Drawing Number:
Approved:	A1-02
Job Number:	

File Name:

c:\volumes\yds\server\projects\24-040 - 2020 arthur ave lakewood addition\a101.dwg

GENERAL NOTES:

1. GENERAL CONTRACTOR & ALL SUBCONTRACTORS TO FIELD VERIFY ALL EXISTING CONDITIONS, EXAMINE THE ENTIRE SITE AND THE CONSTRCTION DOCUMENTS TO ENSURE THEIR KNOWLEDGE OF ALL RELEVANT EXISTING FIELD CONDITIONS AFFECTING THE SCOPE OF WORK PRIOR TO PRICING. ANY DESCREPANCIES OR CONFLICTS BETWEEN THE ARCHITECTURAL AND ENGINEERING DOCUMENTS AND FIELD CONDITIONS SHALL BE CLARIFIED WITH THE ARCHITECT AND ENGINEER BEFORE INITIATING WORK.

2. IT IS THE RESPONSIBILITY OF THE GENERAL CONTRACTOR TO OBTAIN ACCURATE FIELD MEASUREMENTS AND VERIFY ALL DIMENSIONS AND TO PROVIDE SHOP DRAWINGS TO ENSURE AN ACCURATE FIT. NO CLAIM FOR EXTRA COMPENSATION WILL BE ALLOWED BASED ON FAILURE TO IDENTIFY EXISTING FIELD CONDITIONS.

3. GENERAL CONTRACTOR SHALL REPORT TO THE ARCHITECT ANY ERRORS, INCONSISENSCIES OR OMMISSIONS THEY MAY DISCOVER PRIOR TO THE COMMENCING OF WORK WITH THE REQUEST FOR INFORMATION (RFI) FORM.

4. DIMENSIONS TAKE PRECEDENCE OVER DRAWINGS. ALL DIMENSIONS ARE FROM FACE OF FINISH OF WALL (TYPICAL UNLESS OTHERWISE NOTED). - DO NOT SCALE.

5. ALL DOOR ROUGH OPENINGS ARE TO BE LOCATED 3" FROM NEAREST WALL AT HINGE SIDE (TYPICAL UNLESS OTHERWISE NOTED).

ELEVATION KEYNOTES

1. NEW ARCHITECTURAL ASPHALT SHINGLES. COLOR TO BE SELECTED BY OWNER.
2. EXISTING VINYL SHAKE SIDING TO REMAIN
3. NEW VINYL SHAKE SIDING TO MATCH EXISTING PROFILE AND COLOR.
4. NEW 12" HIGH PVC STEPPED FRIEZE BOARD PAINTED WHITE.
5. NEW DOWNSPOUTS AND GUTTERS TO MATCH EXISTING.
6. EXISTING GUTTER TO REMAIN
7. NEW HARDIE BOARD PANEL SMOOTH FINISH WITH 3-1/2" TRIM BORDER PAINTED WHITE
8. NEW DECORATIVE PVC WRAPPED COLUMN WITH BASE AND CAP MOLDING.
9. 12" PVC FASCIA BOARD PAINTED WHITE
10. NEW ANDERSEN 100 SERIES WHITE WINDOW. PROVIDE PVC TRIM TO MATCH EXISTING PROFILE.
11. EXPOSED POURED FOUNDATION WALL WITH BRICK TEXTURE FINISHED WHITE.
12. PREFINISHED WHITE ALUMINUM FASCIA TO MATCH EXISTING

2 / A2-01 SOUTH ELEVATION
SCALE: 1/4" = 1'-0"

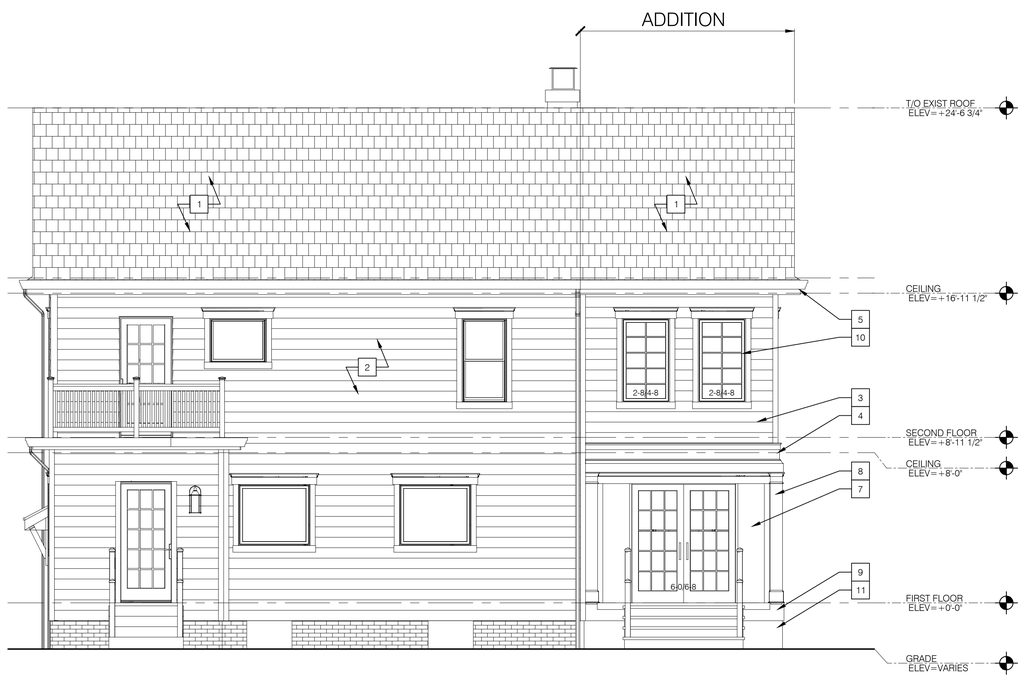

3 / A2-01 WEST ELEVATION
SCALE: 1/4" = 1'-0"

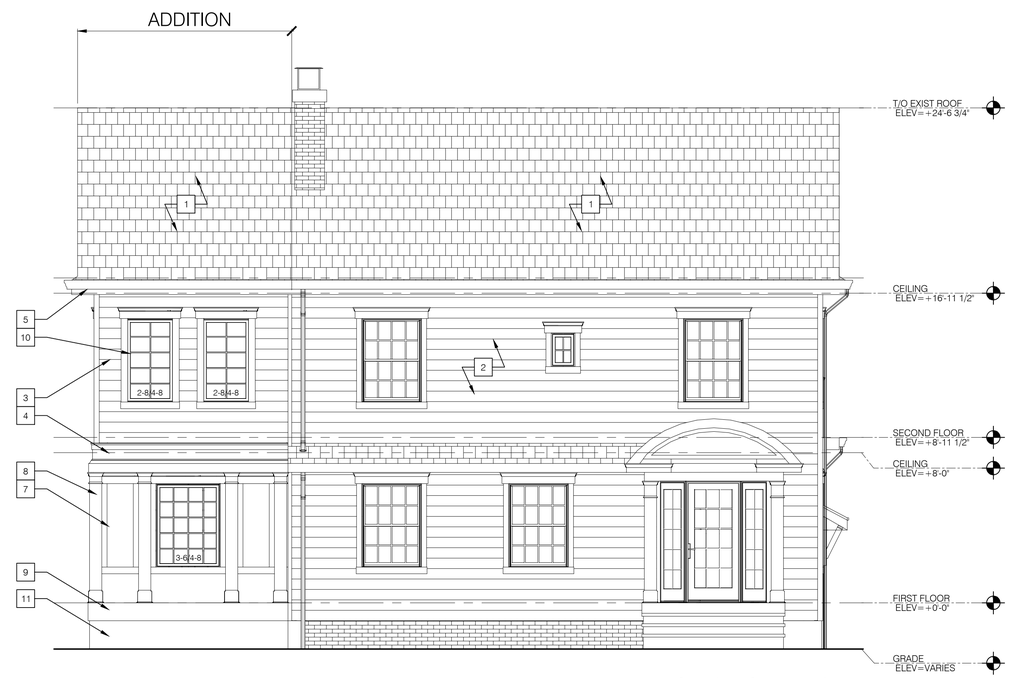

1 / A2-01 EAST ELEVATION
SCALE: 1/4" = 1'-0"

Seal:

General Notes:

ISSUES:		DATE:
ABR	○	04-17-24
	○	
	○	
	○	
	○	
	○	
	○	
	○	
	○	

YOUNG DESIGN STUDIO
15614 Detroit Ave.
Lakewood, OH 44107
www.youngdesignstudio.com
p. 216.616.9212
Architecture | Interiors | Urban Design

2020 Arthur Residential Addition

2020 Arthur Ave.
Lakewood, Ohio 44107

Drawing Title:

EXTERIOR ELEVATIONS

Drawn by:	Date:
BEY	04-08-2024
Checked by:	Drawing Number:
Approved:	A2-01
Job Number:	

File Name:

c:\volumes\ydi\server\projects\24-040 - 2020 arthur ave lakewood addition\a201.dwg

SITE DATA
LAND USE: 5100 R-1 SINGLE FAMILY RESIDENTIAL
PARCEL #: 314-14-061
ZONING DISTRICT: CRL - RETAIL - LOCAL
LAND AREA: 10,500 SF
AREA OF GARAGE: 360 SF

EXISTING FIRST FLOOR BUILDING AREA: 1,007 SF
EXISTING FIRST FLOOR LOT COVERAGE AREA
INCLUDING GARAGE: 1,367 SF
EXISTING SECOND FLOOR AREA: 780 SF
FIRST FLOOR ADDITION AREA: 90 SF
SECOND FLOOR ADDITION AREA: 270 SF
TOTAL FIRST FLOOR BUILDING AREA: 1,097 SF
TOTAL SECOND FLOOR BUILDING AREA: 1,050 SF

EXISTING LOT COVERAGE: 13.01%
PROPOSED LOT COVERAGE: 13.87%

PROJECT SUMMARY
NEW PRIMARY 2-STORY ADDITION AT SIDE OF EXISTING 2-STORY SINGLE FAMILY HOME. EXISTING 1-STORY COVERED PORCH AT SIDE OF HOME TO BE DEMOLISHED. INTERIOR ALTERATION TO FIRST AND SECOND FLOORS.

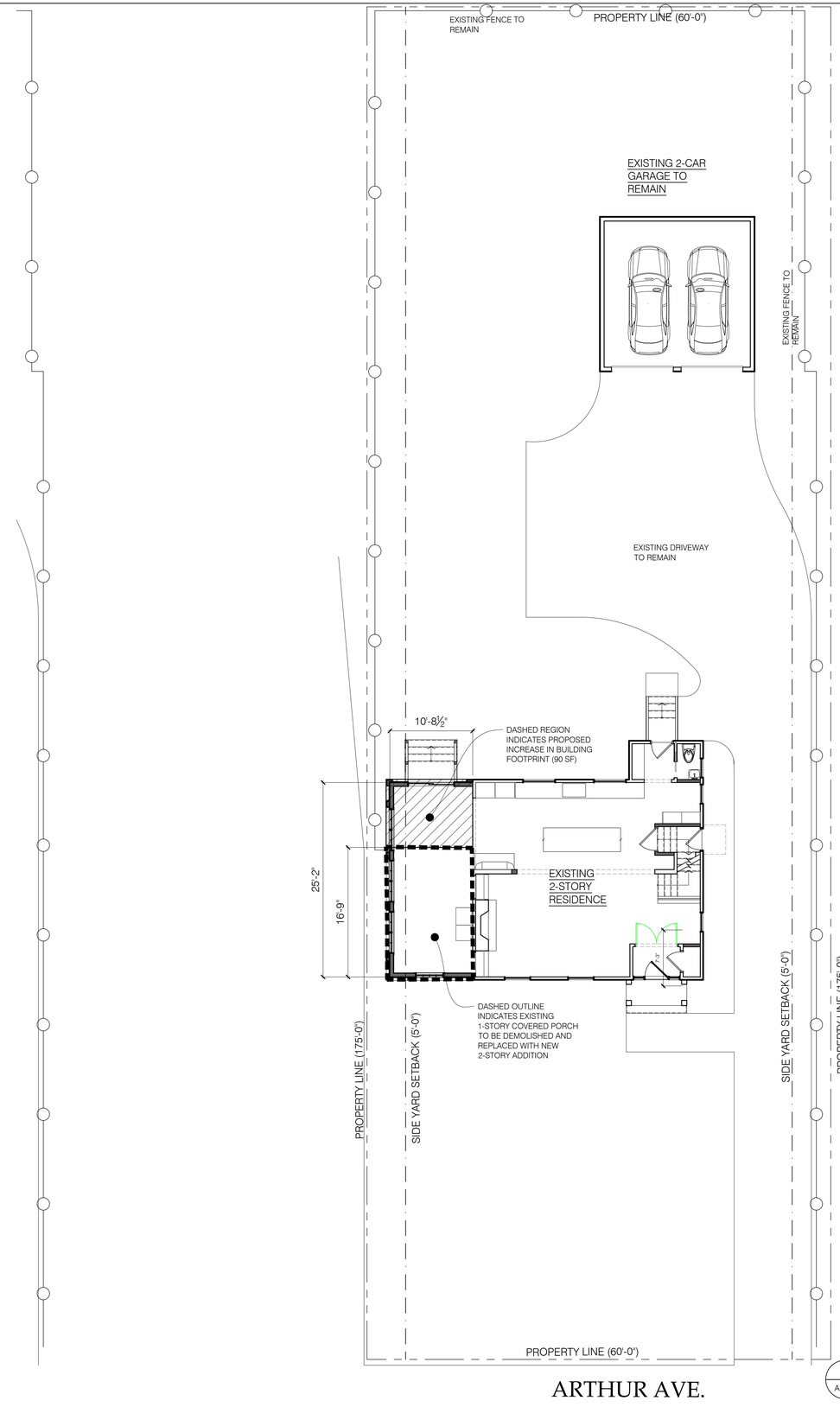

1 AS-01 PROPOSED SITE PLAN
SCALE: 1/8" = 1'-0"

Seal:
STATE OF OHIO
BRANDON J. YOUNG
9985
REGISTERED ARCHITECT
NOT FOR CONSTRUCTION

General Notes:

ISSUES:	DATE:
ABR	04-17-24

YOUNG DESIGN STUDIO
15614 Detroit Ave.
Lakewood, OH 44107
www.youngdesignstudio.com
p. 216.616.9212
Architecture | Interiors | Urban Design

2020 Arthur Residential Addition

2020 Arthur Ave.
Lakewood, Ohio 44107

Drawing Title:
SITE PLAN

Drawn by: BEY
Date: 04-08-2024
Checked by:
Approved:
Job Number:
Drawing Number: AS-01

File Name:

c:\volumes\yds\server\projects\24-040 - 2020 arthur ave lakewood addition\ch01.dwg

ARCHITECTURAL CLASSICS®

Manufactured by The Foundry®

Bring Your Design Ideas to Life with Shake, Shingle and Scallop Siding

ARCHITECTURAL SHAKES, STAGGERED SHAKES, PERFECTION SHINGLES & SCALLOPS

With artistic detail and visual appeal, Architectural Classics will enhance your home with the natural beauty of genuine cedar but without the time-consuming upkeep.

DETAILS INSPIRED BY CLASSIC SIMPLICITY

Designed to inspire, the Architectural Classics Collection makes it easy to infuse your home with your personal touch. With four distinctive profile designs and a range of textures, this high-performance exterior cladding can transform any home with warmth and style that's certain to draw admiring glances.

Take a fresh "first look" at your home's exterior and imagine the charming effect shakes, shingles and scallops will create. Whether you prefer casual sophistication in subtle hues or a dramatic design in bold colors, it's here that the excitement of customizing your home exterior begins to take shape.

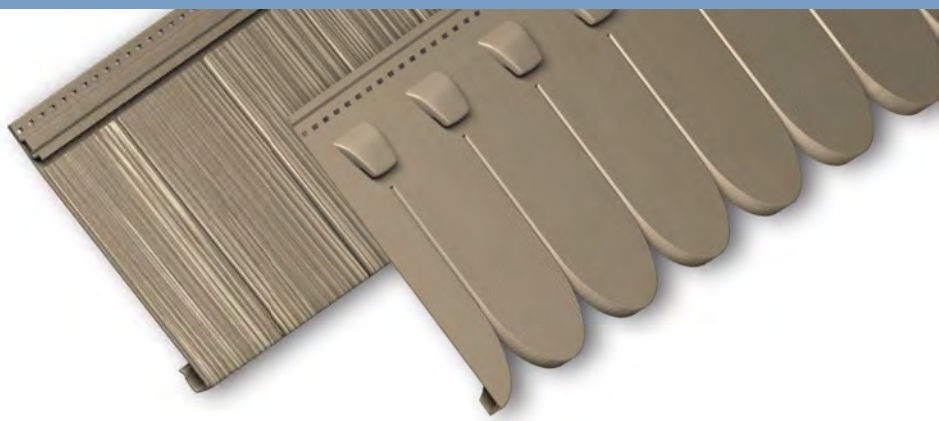

CREATING CUSTOM STYLE

The marks of a mill saw for a rustic feel that plays to the modern-traditional style of the home. Shapes and sizes that add something a little unexpected. Techniques and knowledge passed down from generation to generation. And most of all, a mix of quality and culture resulting in a perfectly unique exterior siding.

EASY-CARE ELEGANCE THAT'S BUILT TO LAST

Discover the natural cedar beauty of the Architectural Classics Collection. A beauty that does not succumb to the elements. Architectural Shakes, Staggered Shakes, Perfection Shingles and Scallops are manufactured with man-made material that won't crack, fade, buckle or rot. Their durable finish requires less maintenance than other exterior claddings, which means you'll spend less time on upkeep and more time enjoying life. Simply rinse occasionally with water from a garden hose to remove most airborne dust and dirt and restore the siding's fresh-looking appearance.

AGELESS CRAFTSMANSHIP MEETS MODERN TECHNOLOGY

Nearly 100 authentic molds taken from actual cedar shakes and shingles are a true throwback to classic artisan style. The four profiles included in the Architectural Classics Collection represent some of the most significant architectural patterns from the 20th century.

Thanks to state-of-the-art technology, Alside's Architectural Classics Collection features a full-length nail hem for easy installation. It is also a more sustainable material than many other siding products, making it a great choice for today and generations to come.

VALUE-ADDED ENERGY SAVINGS*

Architectural Classics, when used with Fullback® Siding Insulation, can help save energy, reduce utility costs and create a more comfortable home environment. The contoured insulation is custom cut to fit behind the siding, providing a powerful thermal barrier against energy loss and enhancing the siding's durability and appearance. Adding insulation to the exterior of the home also helps lessen outside noise for a more peaceful interior.

Fullback Siding Insulation can be installed with all 7" exposure panels from Architectural Classics, including Shake, Staggered Shake and Perfection Shingle profiles.

INVEST NOW, SAVE LATER

You Can Enjoy the True Look of Cedar, with None of the Headaches

EXPERTLY CRAFTED FOR ENDURING STYLE

With Architectural Shakes, Staggered Shakes, Perfection Shingles and Scallops you can forget about the time and expense of scraping, sanding, staining and painting. Each panel is carefully manufactured with a resilient finish that's highly weatherable and fade-resistant. The Architectural Shakes line also offers even greater design options with an exciting variety of rich and unique colors featuring an innovative acrylic finishing process.

TRADITIONAL . . . RIGHT DOWN TO THE WAY IT'S INSTALLED

The contractor and installer will feel an immediate connection with Alside Architectural Classics because it is installed in a standard fashion. Architectural Classics features a traditional, full-length nail hem.

AUTHENTIC

It could very well be that you've seen a house with Alside siding and assumed it was natural wood. It's that realistic. You see a defined texture of natural grain that lends an organic randomness while creating a natural shadowing effect for added dimension and visual appeal.

EASY TO INSTALL

Architectural Shakes, Staggered Shakes, Perfection Shingles and Scallops go up fast and easy, just like traditional siding. Each 5' panel requires just a single installer, and our use of a familiar full-length nail hem means no specialized training or tools are needed to install the siding.

SCRAP REDUCTION

Alside products will yield an environmentally and financially responsible 67% less scrap. Because of our random design and hidden seams, small pieces are easy to use, helping to ensure lasting quality and character in your home.

PERFORMANCE

Architectural Shakes, Staggered Shakes, Perfection Shingles and Scallops resist buckling and open laps and can be installed any time of the year. Plus, Alside products are backed by a lifetime limited warranty.**

A TRUE REPRODUCTION *of* CEDAR'S NATURAL GRAIN

Give Your Home a Warm and Welcoming Ambiance

ARCHITECTURAL SHAKES™

ARCHITECTURAL SHAKES

You'll enjoy shakes that bear the rich grain of hand-split cedar, and on all claddings, the texture is carried through on the bottom edge of each shake – an honest rough-sawn look. This level of authenticity is only possible with a proprietary process.

What you won't see are seams. Even when you know just where to look, they're difficult to find. All this makes Alside's Architectural Classics one of the most realistic sidings available.

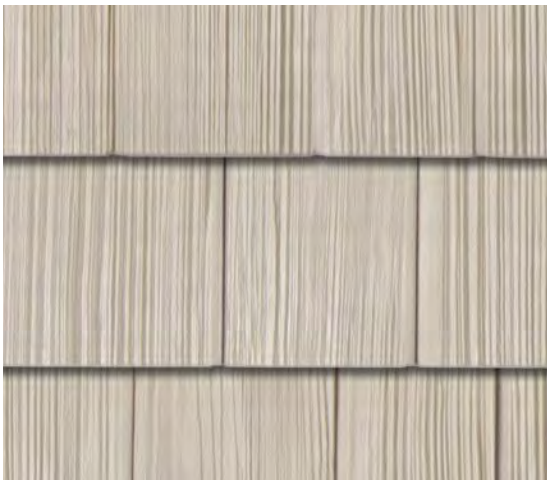

Our proprietary process recreates the appearance of natural weathering to achieve a beautifully organic appearance.

HANDCRAFTED AUTHENTICITY

Shakes have always been esteemed by those who believe a home should be one with its natural setting. Split along the grain, cedar shakes are deeply textured in a way that sets off an interplay of light and shadow. The sun moves across the sky, and the light changes the house as it does the landscape. Architectural Shakes are the ideal way to capture this beauty.

NATURALLY AGED

Architectural Classics' Weathered Collection™ colors capture the essence of time, giving a home the authentic appearance of cedar that has naturally weathered over the years. Our proprietary process achieves this incredible look by presenting a lighter shade of a color in the grain and a darker one on the higher points. Premium colors are available in both Architectural Shake and Staggered Shake.

DETAILS THAT MAKE A DIFFERENCE

Architectural Shakes and Staggered Shakes can be used as either an accent or as conventional siding on your entire home. With easy elegance, the artistic detail and superb craftsmanship ensure an upscale appearance that masterfully recreates the natural appeal of handcrafted wood.

CORNER POSTS

Use Alside standard or Trimworks® corner posts or choose these special shake corners designed to match each profile for a refined finished look.

THE BEAUTY OF CUSTOM CRAFTSMANSHIP

Classic Style Without the Upkeep

Architectural Staggered Shakes masterfully combine handcrafted beauty with modern practicality.

ARCHITECTURAL STAGGERED SHAKES

Architectural Staggered Shakes echo the rustic charm of another time. The uneven pattern and rough-sawn look of their edges were handcrafted by artisan mold makers to replicate the natural, genuine beauty of a custom cedar installation.

With intricate detail, the "staggered" bottom edges replicate the craftsmanship of early settlers in the Eastern and Northern U.S. seaboards who split cedar into planks to protect their homes from the weather. Today's Architectural Staggered Shakes convey rugged, naturally weathered appeal in a virtually maintenance-free cladding.

ARCHITECTURAL PERFECTION SHINGLES™

Our modern take on this classic never has to be painted or stained to maintain resilience to the weather. Plus, unlike organic wood, Architectural Perfection Shingles will never warp or split.

ARCHITECTURAL PERFECTION SHINGLE

Originally referred to as the "seaside style," cedar shingled homes first lined the cobblestone streets of Boston in the 1800s. Like the original, only Architectural Perfection Shingles have a naturally textured surface and edge.

The Perfection Shingle delivers the perfect balance of the deep texture of Shakes and the clean lines of Shingles. This profile offers a traditional look with a hint of ruggedness. Offered in a 7" exposure, the crisp vertical grains are highlighted, complementing random shingle widths.

PAST MEETS PRESENT

Mix and Match for Distinction and Style

For drama or distinction, nothing matches the versatility or creative possibilities of Architectural Scallops.

ARCHITECTURAL SCALLOPS

Perhaps more than any other specialty siding, this panel creates an immediate transformative effect on the exterior of your home. The pristine rows of rounded curves impart a generous measure of character and charm, while the substantial shadow line adds a bold layer of visual dimension.

Architectural Scallops are ideally suited for gables, dormers and other accent areas. Choose from a broad palette of colors, many of which simply are not offered anywhere else – and challenge your imagination with the possibilities!

COLOR DEFINES *the* DESIGN

Create a Signature Style for Your Home with Eye-Catching Colors

COLOR AND DESIGN INSPIRATION

Our standard and architectural colors are available in 7" Shakes, 10" Staggered Shakes, 7" Perfection Shingles, and Scallops, as well as complementing corner posts and transitional starter. Whether you prefer a subtle monochromatic color scheme in classic hues or rich architectural colors with contrasting accents, Architectural Classics has everything you need to achieve your ideal finished look.

STANDARD COLOR COLLECTION

Glacier White | *Antique Parchment* | *Natural Linen* | *Platinum Gray* | *Cape Cod Gray* | *Mystic Blue* | *Coastal Sage*

Juniper Ridge | *Adobe Cream* | *Maple* | *Monterey Sand* | *Canyon Clay* | *Vintage Wicker* | *Tuscan Clay*

ARCHITECTURAL COLOR COLLECTION

Fired Brick | *Canyon Drift* | *Flagship Brown* | *Deep Espresso* | *Rustic Timber* | *Mountain Fern* | *Deep Moss*

Harbor Blue | *Midnight Blue* | *Laguna Blue* | *Riviera Dusk* | *Storm* | *Sterling Gray* | *Ageless Slate*

Charcoal Smoke | *Cast Iron*

WEATHERED COLLECTION™ PREMIUM COLORS

Our Weathered Collection premium colors are available in 7" Shakes, 7" Perfection Shingle and 10" Staggered Shakes, as well as complementing corner posts.

Sand Castle

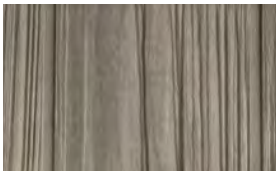

Misty Gray

Barley

Brownstone

Auburn

ChromaTrue®

Our darker siding colors are fortified with ChromaTrue® technology for superior color retention. This advanced copolymer compound provides long-term color stability and better performance on darker colors.

Note: Colors may be slightly different from their appearance in this brochure. Make final color selections using actual product samples.

— ARCHITECTURAL CLASSICS —

The ALSIDE EXTERIOR DESIGN SYSTEM

Coordinated Easy-Care Products

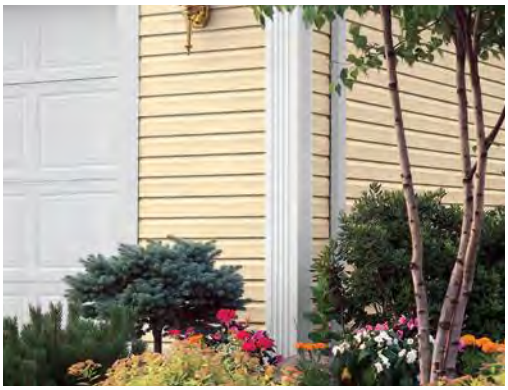

EXTERIOR TRIM, ACCESSORIES AND ACCENTS

Add the perfect finishing touch to your Architectural Classics siding with our beautiful collection of color-matched trim and accessories. Together, these exterior design elements will give your home a "pulled together" look that truly sets it apart.

The distinction is in the details. The color, trim and accents you select can have a dramatic effect on the appearance of your home. Classic lineals around the windows or doorway, extra detail on the corner posts, a crisp band of trim along the roofline – it's the little things that give a home personality and style.

PEACE OF MIND

Architectural Classics Shakes, Perfection Shingles, and Scallops manufactured by The Foundry are backed by a lifetime limited warranty.** Please direct all claim questions to: The Foundry, Attention: Warranty Dept., 29797 Beck Road, Wixom, MI 48393.

CERTIFICATION PROGRAM

Pertains to Architectural Classics
Consult the VSI website at *www.vinylsiding.org* for a current list of certified products and colors.

USGBC MEMBER

CUSTOM-CRAFTED IN AMERICA

Please recycle this literature.

Alside 3773 State Road, Cuyahoga Falls, Ohio 44223
1-800-922-6009 *www.alside.com*

©2023 Alside. Trademarks mentioned in this document are the property of Alside, its affiliates, or their respective owners. *See your Alside Sales Representative for additional information regarding any questions you might have, or any assertions herein, concerning energy efficiency or savings. Energy savings will vary. Energy savings assume proper installation and use. **For a copy of the written product warranty please visit *www.alside.com/support/warranties/* or contact your Alside Sales Representative. Limited warranty does not apply to damage caused by faulty or improper installation, or causes outside of Alside's control. Colors may be slightly different from their appearance in this brochure. Make final color selections using actual product samples. Specifications are subject to change without notice. Printed in USA. 06/23 75-2050-01

Item # 9002500

BOARD OF BUILDING STANDARDS
ARCHITECTURAL REVIEW BOARD
SIGN REVIEW BOARD

12650 Detroit Avenue ● (216) 529-6630 ● FAX (216) 529-5907 ● www.lakewoodoh.gov

Application Cover Page

Docket No.: 05-44-24

Permit No.: BBS24-000045

Applicant Name: Amanda Fort, Dane Street Studios

Project Address: 17401 Edgewater Dr.

Project Name: n/a

Project: Applicant proposes a new front porch on an existing home.

الموت

EXTERIOR PORCH ROOF ADDITION

17401 EDGEWATER DRIVE

LAKEWOOD, OHIO 44107

OWNER CONTACT

Brian and Kristen Grady
17401 Edgewater Drive
Lakewood, OH 44107
(330) 575-1910

CONTRACTOR CONTACT

Tim Ferguson, Project Manager
Oster Services
17415 Northwood Avenue, Suite 100
Lakewood, OH 44107
(440) 570-7675

DESIGNER CONTACT

Amanda Fort
Dane Street Studio
3109 Mayfield Road, Suite 201
Cleveland Heights, OH 44118
(718) 872-8116

DRAWING INDEX

A-0 Cover Sheet, Site Plan, & General Notes

A-1 Demolition Plan
A-2 Proposed Plan
A-3 Exterior Elevation - North
A-4 Exterior Elevation - East
A-5 Exterior Elevation - West
A-6 Section - North/South
A-7 Unused
A-8 Model - Oblique West
A-9 Model - Oblique East

PROJECT INFORMATION

Jurisdiction:	City of Lakewood
Lot Area:	10,269 SF
Existing Building Area:	2411 SF (2-story)
Existing Porch Area:	257 SF
Description of Work:	Addition of new roof structure over existing, raised masonry patio.

GENERAL NOTES

1. Do not scale drawings.
2. All dimensions are from face of finished wall, existing wall, concrete block units, or concrete, unless otherwise noted.
3. All work is to be performed in accordance with all applicable state (2024 Residential Code of Ohio) and local building codes and referenced standards. These documents serve to depict the final configuration of improvements, not dictate all responsibilities the Contractor(s) have in achieving that end. The Contractor should report to Owner and Designer any conflict between bid documents, field conditions, and/or code requirements prior to commencement of work.
4. Provide bracing and support as required to prevent damage to structure and utilities affected by the work.
5. Patch all existing and walls and floors to meet and match existing adjacent surfaces where disturbed and/or damaged by or during the course of the work.
6. The Contractor is to coordinate all work shown on the floor plans with all required mechanical and electrical work. The Contractor shall notify the Designer of any interference of mechanical, electrical, or plumbing work with the proposed plans.
7. Remove and dispose of debris and other materials resulting from demolition and general construction throughout the project.
8. Conduct demolition and removal of debris in such a way as to cause a minimum of interference with adjacent, occupied areas of the home. If shut-off of plumbing or other utilities is required for the work, please notify Owner promptly.

SITE PLAN

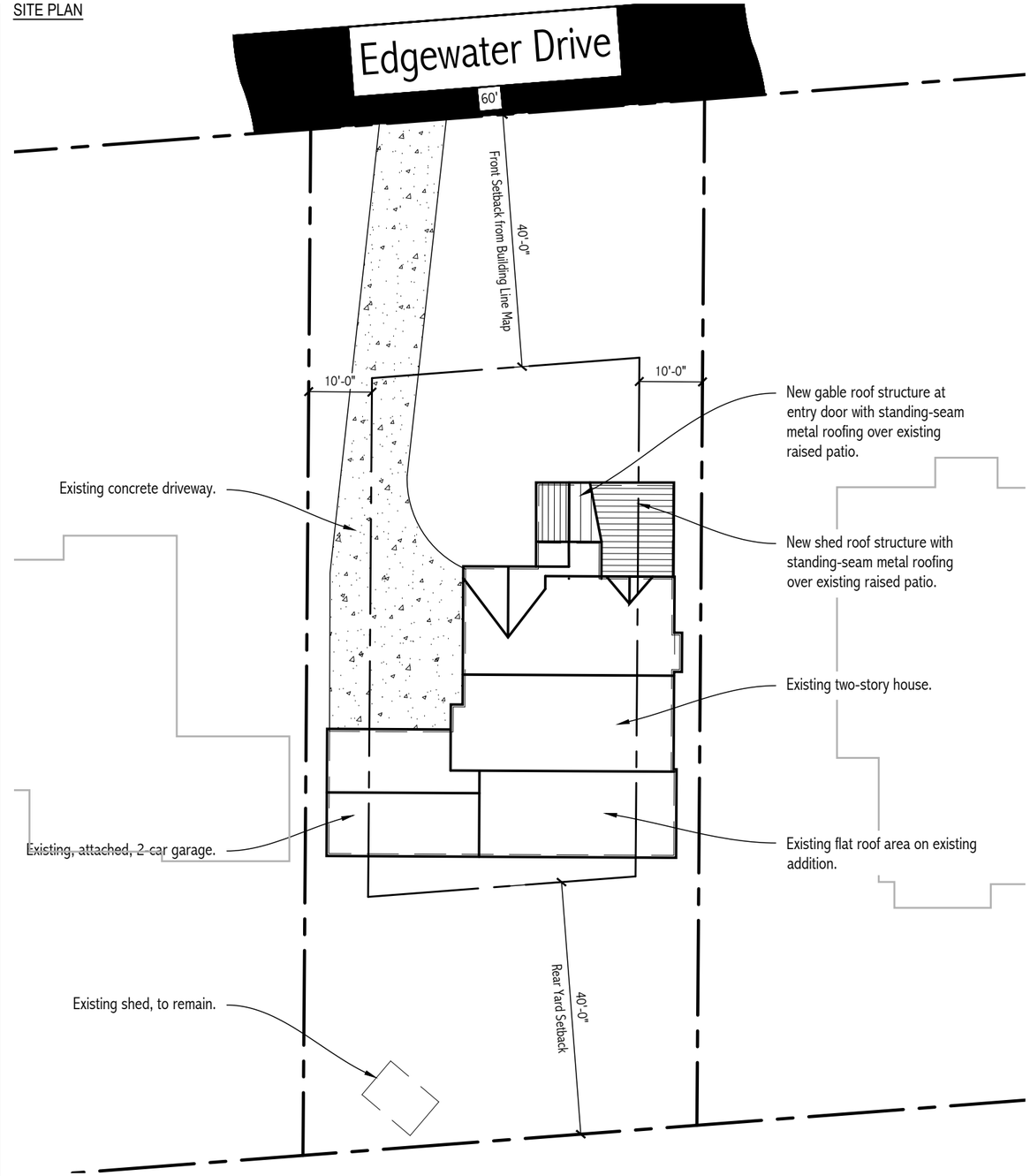

SCALE	ISSUE	
1" = 20'-0"	ABR Submission	4.16.24

COVER SHEET, SITE PLAN, & GENERAL NOTES

GRADY RESIDENCE
17401 EDGEWATER DRIVE
LAKEWOOD, OHIO 44107

DANE STREET STUDIO

A-0

EXTERIOR PORCH ROOF ADDITION

17401 EDGEWATER DRIVE

LAKEWOOD, OHIO 44107

OWNER CONTACT

Brian and Kristen Grady
17401 Edgewater Drive
Lakewood, OH 44107
(330) 575-1910

CONTRACTOR CONTACT

Tim Ferguson, Project Manager
Oster Services
17415 Northwood Avenue, Suite 100
Lakewood, OH 44107
(440) 570-7675

DESIGNER CONTACT

Amanda Fort
Dane Street Studio
3109 Mayfield Road, Suite 201
Cleveland Heights, OH 44118
(718) 872-8116

DRAWING INDEX

A-0 Cover Sheet, Site Plan, & General Notes

A-1 Demolition Plan
A-2 Proposed Plan
A-3 Exterior Elevation - North
A-4 Exterior Elevation - East
A-5 Exterior Elevation - West
A-6 Section - North/South
A-7 Unused
A-8 Model - Front
A-9 Model - Oblique West
A-10 Model - Oblique East

PROJECT INFORMATION

Jurisdiction:	City of Lakewood
Lot Area:	10,269 SF
Existing Building Area:	2411 SF (2-story)
Existing Porch Area:	257 SF
Description of Work:	Addition of new roof structure over existing, raised masonry patio.

GENERAL NOTES

1. Do not scale drawings.
2. All dimensions are from face of finished wall, existing wall, concrete block units, or concrete, unless otherwise noted.
3. All work is to be performed in accordance with all applicable state (2024 Residential Code of Ohio) and local building codes and referenced standards. These documents serve to depict the final configuration of improvements, not dictate all responsibilities the Contractor(s) have in achieving that end. The Contractor should report to Owner and Designer any conflict between bid documents, field conditions, and/or code requirements prior to commencement of work.
4. Provide bracing and support as required to prevent damage to structure and utilities affected by the work.
5. Patch all existing and walls and floors to meet and match existing adjacent surfaces where disturbed and/or damaged by or during the course of the work.
6. The Contractor is to coordinate all work shown on the floor plans with all required mechanical and electrical work. The Contractor shall notify the Designer of any interference of mechanical, electrical, or plumbing work with the proposed plans.
7. Remove and dispose of debris and other materials resulting from demolition and general construction throughout the project.
8. Conduct demolition and removal of debris in such a way as to cause a minimum of interference with adjacent, occupied areas of the home. If shut-off of plumbing or other utilities is required for the work, please notify Owner promptly.

SITE PLAN

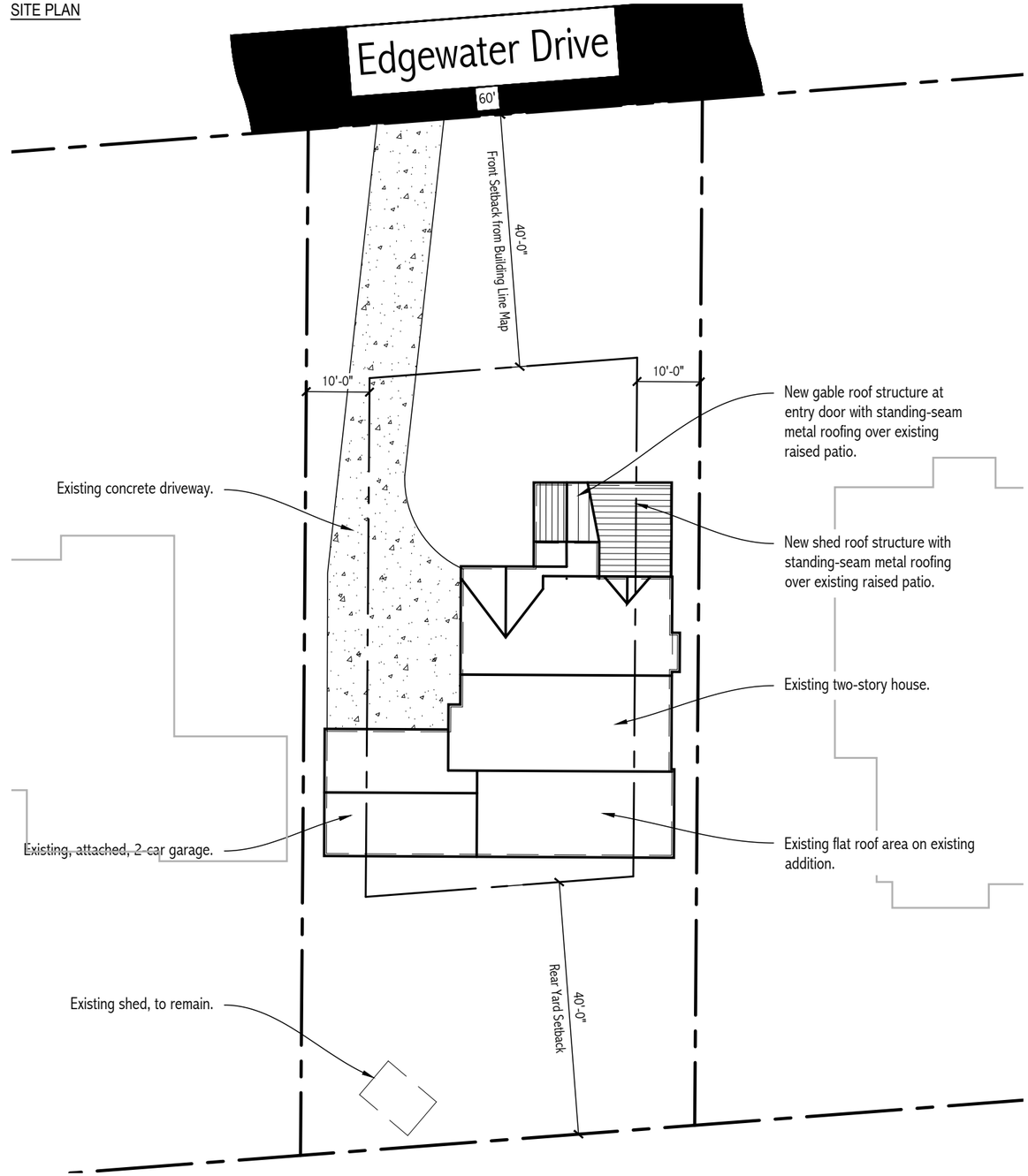

SCALE	ISSUE	
1" = 20'-0"	ABR Submission	4.16.24

COVER SHEET, SITE PLAN, & GENERAL NOTES

GRADY RESIDENCE
17401 EDGEWATER DRIVE
LAKEWOOD, OHIO 44107

DANE STREET STUDIO

A-0

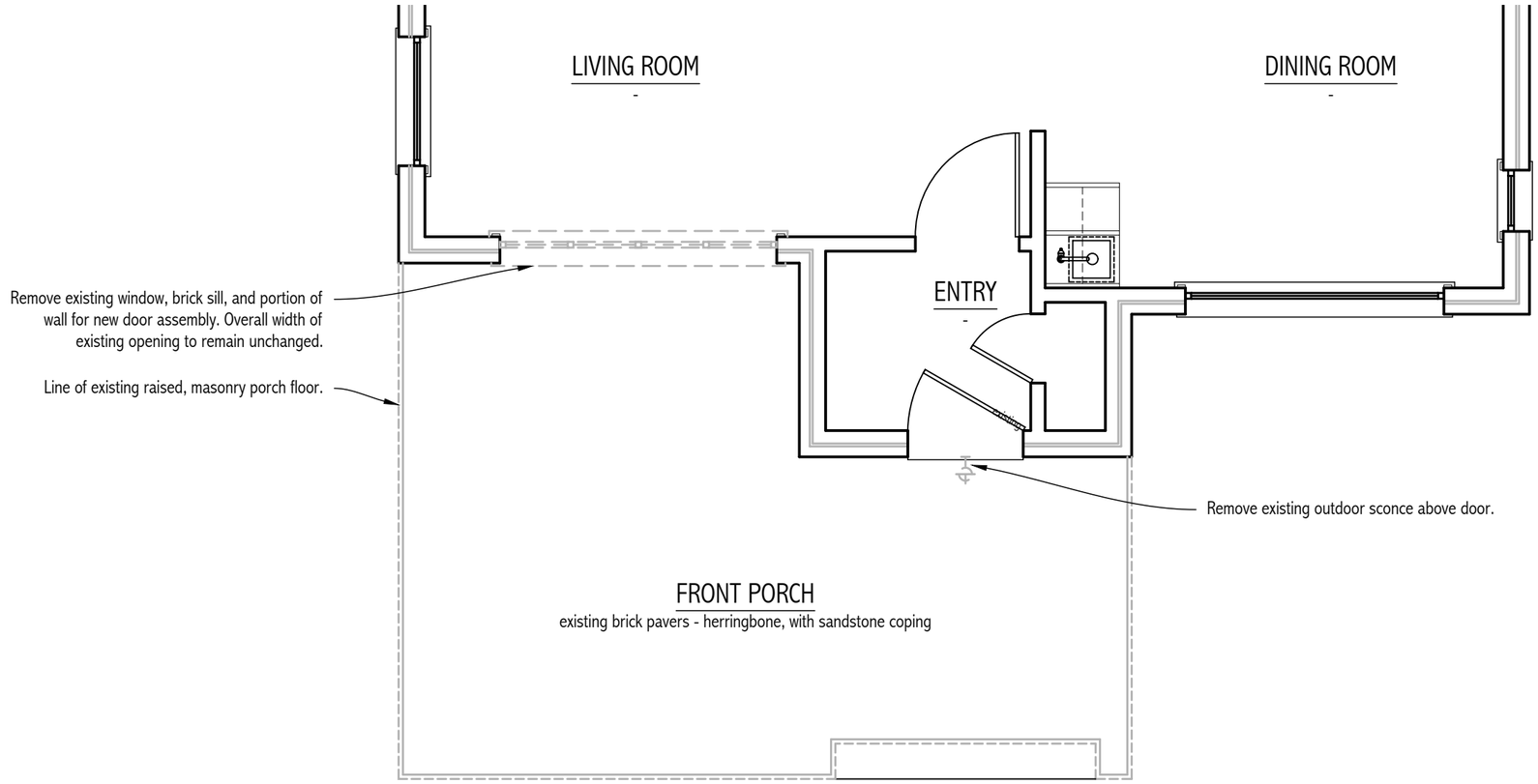

SCALE

1/4" = 1'-0"

ISSUE

CD Review	10.17.23
CD Review 2	3.12.24
ABR Submission	4.16.24

DEMOLITION PLAN

GRADY RESIDENCE

17401 EDGEWATER DRIVE
LAKEWOOD, OHIO 44107

DANE STREET STUDIO

A-1

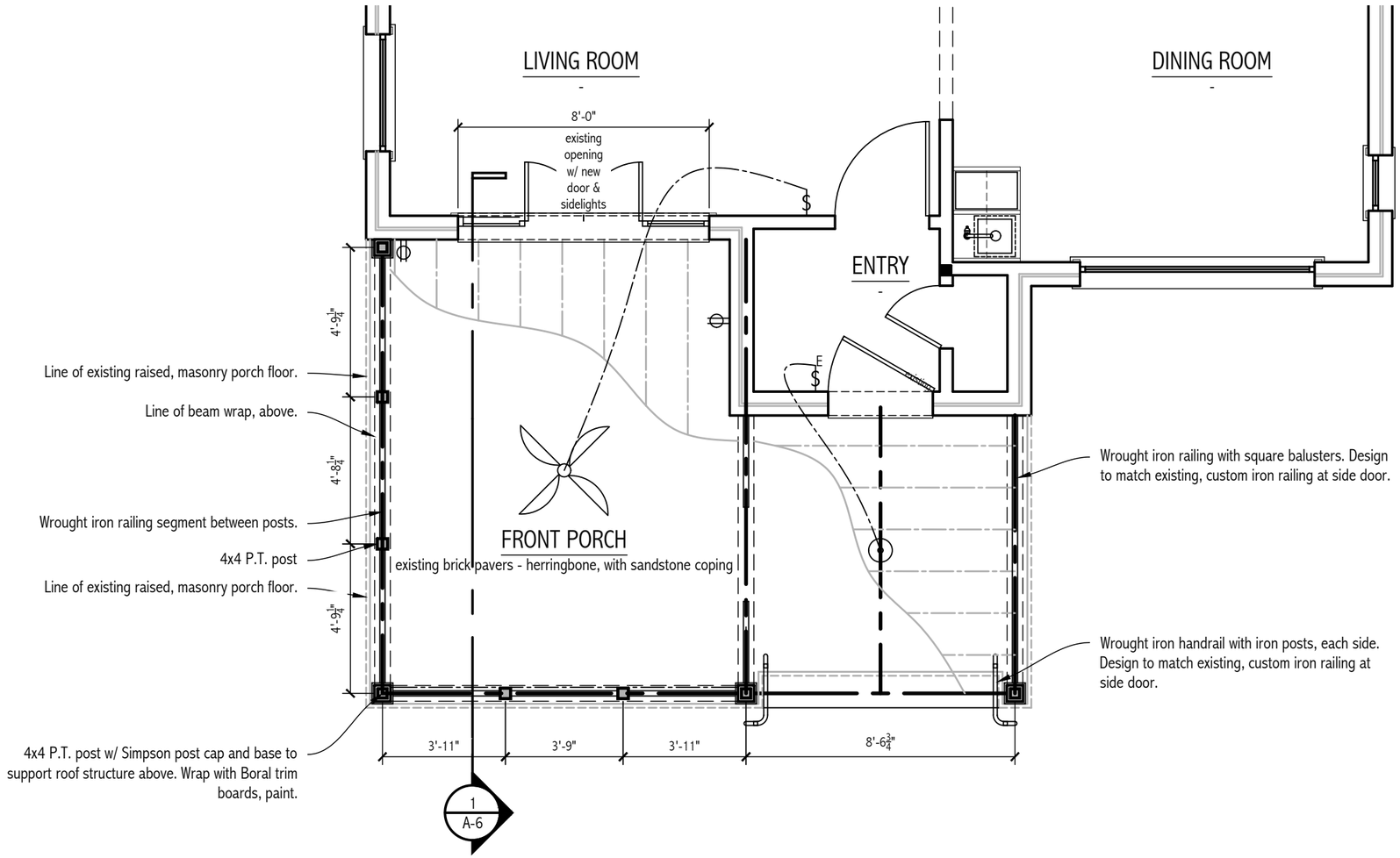

SCALE	ISSUE	
1/4" = 1'-0"	Design Review 1	9.11.23
	CD Review	10.17.23
	CD Review 2	3.12.24
	ABR Submission	4.16.24

PROPOSED PLANS

GRADY RESIDENCE
17401 EDGEWATER DRIVE
LAKEWOOD, OHIO 44107

DANE STREET STUDIO

A-2

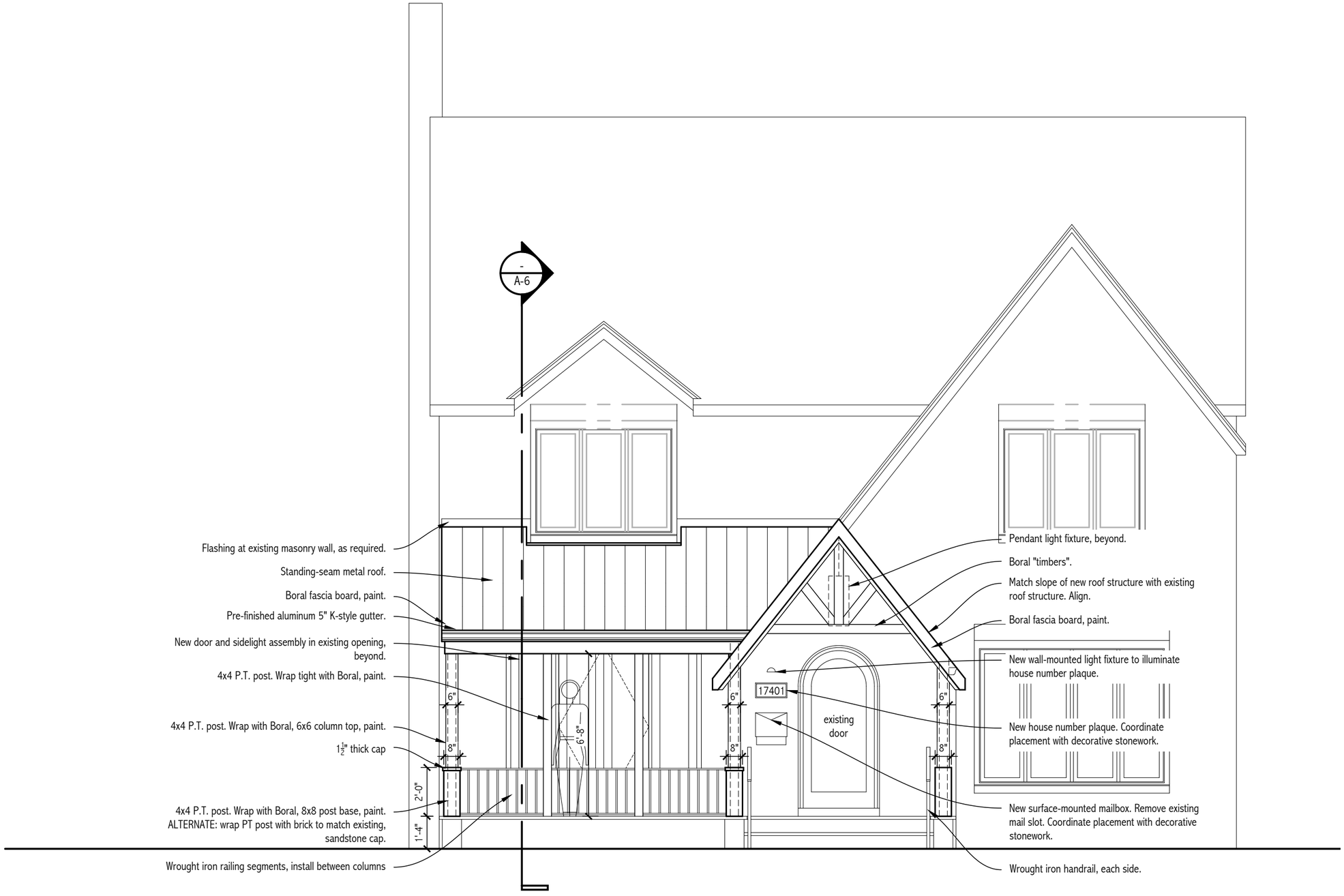

SCALE

1/4" = 1'-0"

ISSUE

Design Review 1	9.11.23
CD Review	10.17.23
CD Review 2	3.12.24
ABR Submission	4.16.24

EXTERIOR ELEVATION - NORTH

GRADY RESIDENCE

17401 EDGEWATER DRIVE
LAKEWOOD, OHIO 44107

DANE STREET STUDIO

A-3

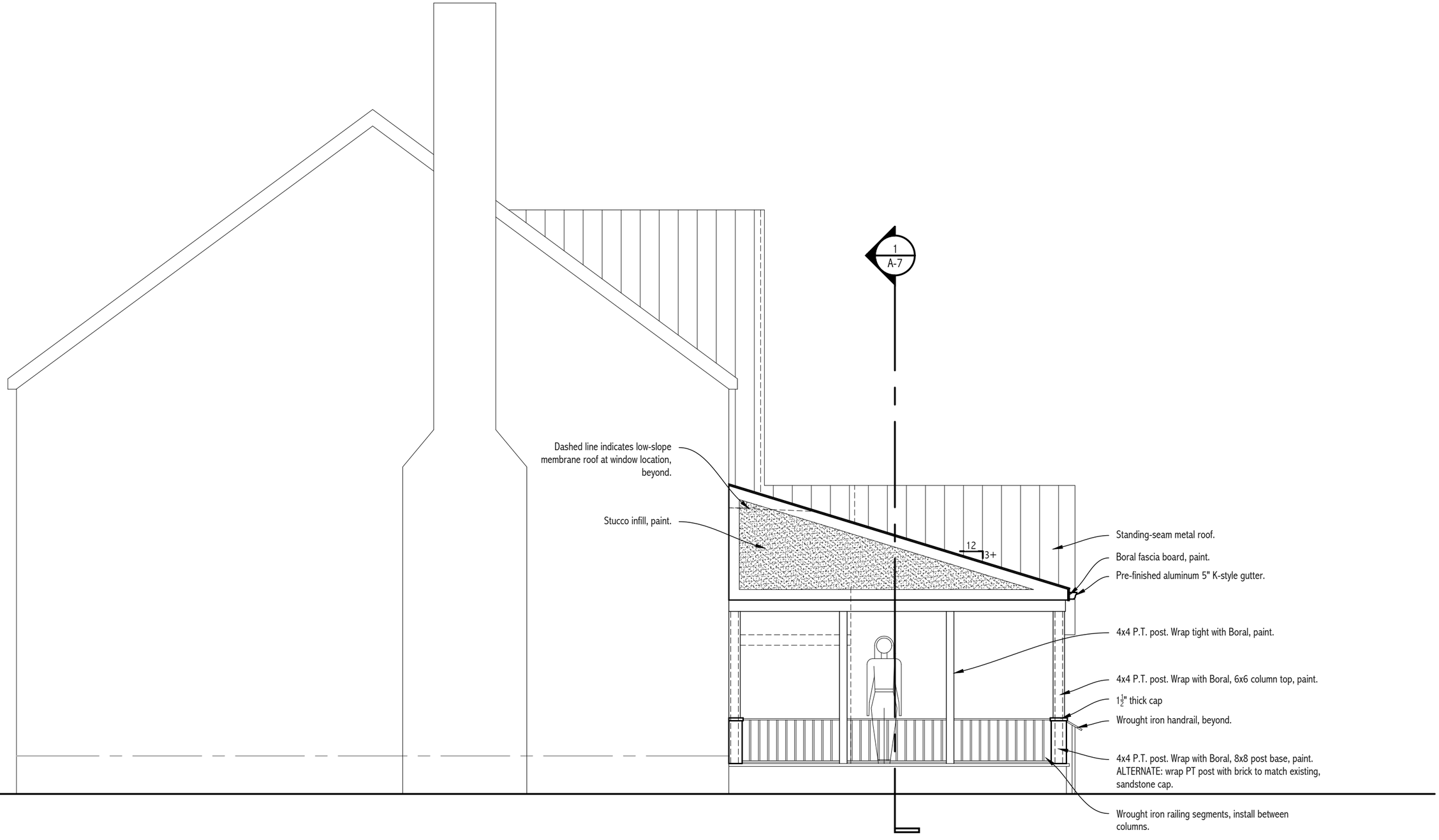

SCALE

¼" = 1'-0"

ISSUE

Design Review 1	9.11.23
CD Review	10.17.23
CD Review 2	3.12.24
ABR Submission	4.16.24

EXTERIOR ELEVATION - EAST

GRADY RESIDENCE

17401 EDGEWATER DRIVE
LAKEWOOD, OHIO 44107

DANE STREET STUDIO

A-4

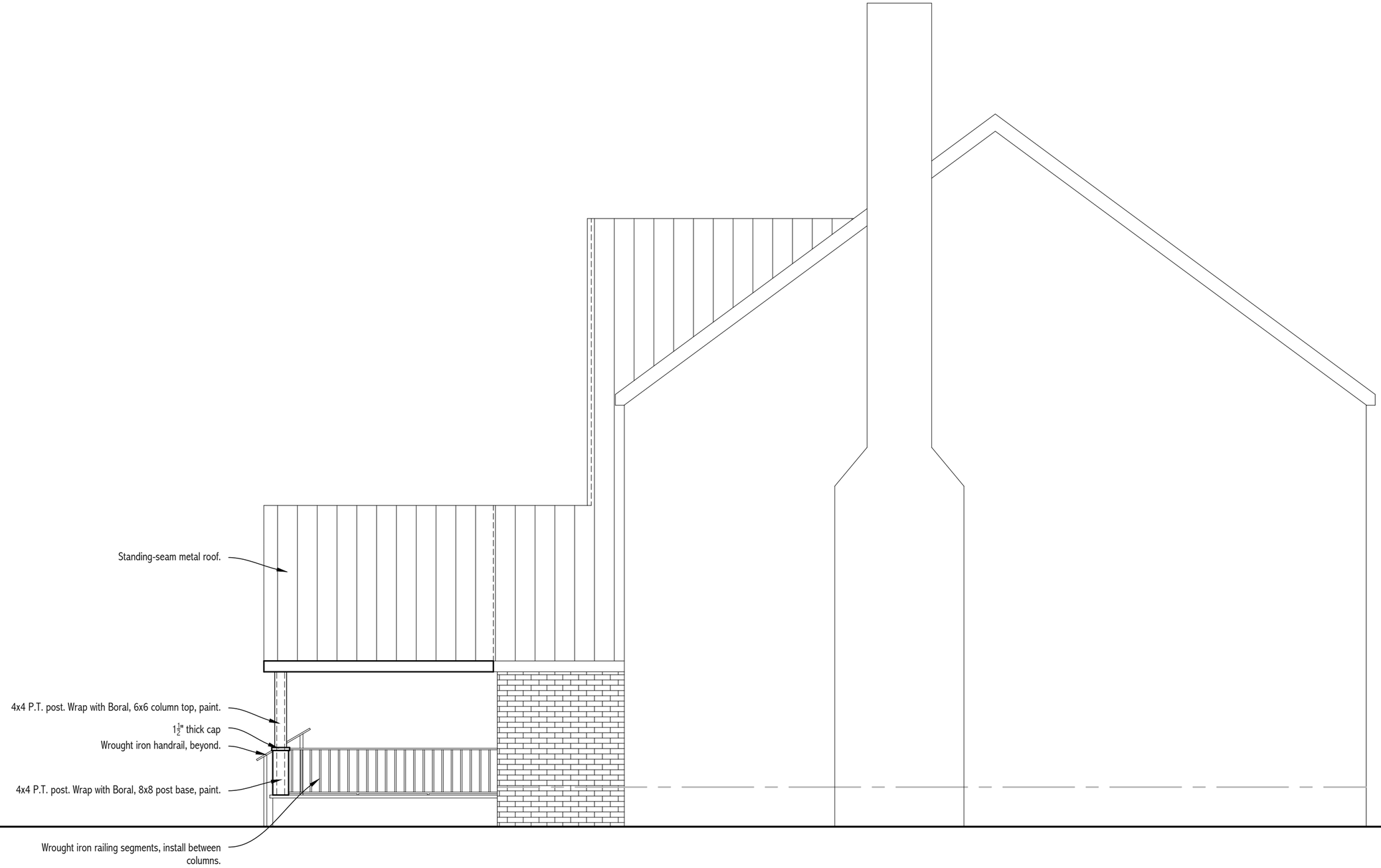

SCALE

¼" = 1'-0"

ISSUE

CD Review	10.17.23
CD Review 2	3.12.24
ABR Submission	4.16.24

EXTERIOR ELEVATION - WEST

GRADY RESIDENCE

17401 EDGEWATER DRIVE
LAKEWOOD, OHIO 44107

DANE STREET STUDIO

A-5

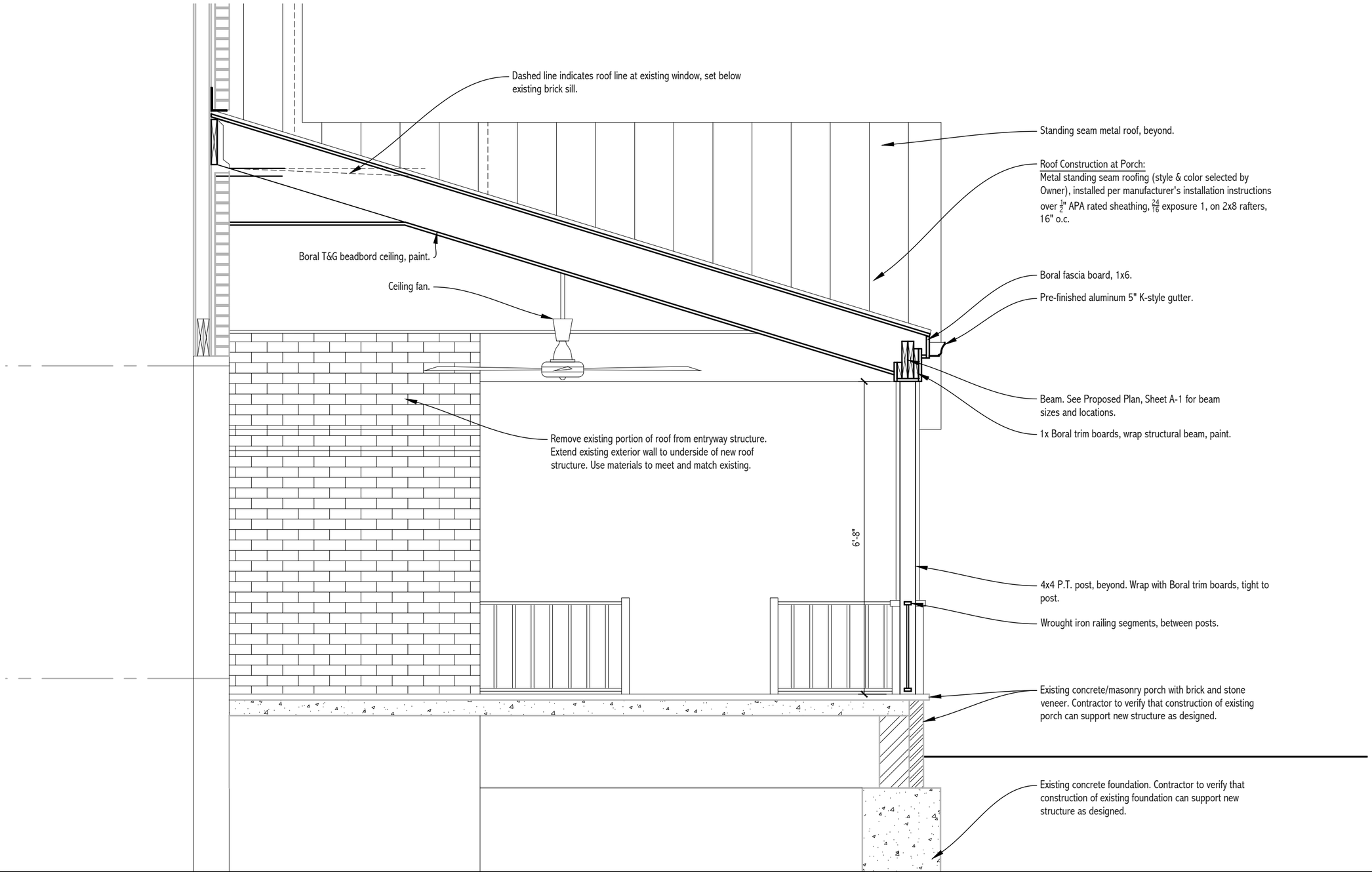

SCALE

1/2" = 1'-0"

ISSUE

CD Review	10.17.23
CD Review 2	3.12.24
ABR Submission	4.16.24

SECTION - NORTH/SOUTH

GRADY RESIDENCE

17401 EDGEWATER DRIVE
LAKEWOOD, OHIO 44107

DANE STREET STUDIO

A-6

SCALE	ISSUE	
NA	ABR Submission	4.16.24

MODEL - FRONT VIEW

GRADY RESIDENCE
17401 EDGEWATER DRIVE
LAKEWOOD, OHIO 44107

DANE STREET STUDIO

A-8

SCALE	ISSUE		
NA	ABR Submission	4.16.24	

MODEL - OBLIQUE, WEST

GRADY RESIDENCE
17401 EDGEWATER DRIVE
LAKEWOOD, OHIO 44107

DANE STREET STUDIO

A-9

SCALE	ISSUE		
NA	ABR Submission	4.16.24	

MODEL - OBLIQUE, EAST

GRADY RESIDENCE
17401 EDGEWATER DRIVE
LAKEWOOD, OHIO 44107

DANE STREET STUDIO

A-10

From Street

From Street - East

From Street - West

SCALE	ISSUE		
NA	ABR Submission	4.16.24	

EXISTING PHOTOS - CONTEXT

GRADY RESIDENCE
17401 EDGEWATER DRIVE
LAKEWOOD, OHIO 44107

DANE STREET STUDIO

E-0

Front Elevation - North

Existing Patio - Seating Area

Existing Patio - From West

SCALE	ISSUE			
NA	ABR Submission	4.16.24	EXISTING PHOTOS	GRADY RESIDENCE 17401 EDGEWATER DRIVE LAKEWOOD, OHIO 44107 DANE STREET STUDIO	E-1

Existing Patio - From West

Existing Patio - From East

Existing Patio - From West

SCALE	ISSUE		
NA	ABR Submission	4.16.24	

EXISTING PHOTOS

GRADY RESIDENCE
17401 EDGEWATER DRIVE
LAKEWOOD, OHIO 44107

DANE STREET STUDIO

E-2

Existing Brick & Roofing

Existing Window Finish (match)

Existing Window - Measurement Reference

SCALE	ISSUE		
NA	ABR Submission	4.16.24	

EXISTING PHOTOS

GRADY RESIDENCE
17401 EDGEWATER DRIVE
LAKEWOOD, OHIO 44107

DANE STREET STUDIO

E-3

metal roof - weathered copper

french door - tan

iron railing - black

metal roof product sample

Line #	Location:	Attributes	Item Price	Qty	Ext'd Price
36	CUSTOM DOOR WIDTH	**Pella® Reserve, , Traditional Inswing Door Sidelight, Double Inswing Door, Inswing Door Sidelight, 91.25 X 79.5, Tan**	$11,725.33	1	$11,725.33

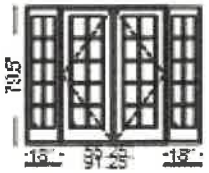

Viewed From Exterior

Rough Opening: 92" X 80"

PK #
2164

1: 1880 Fixed Inswing Door Sidelight
Frame Size: 18 X 79 1/2
General Information: Standard, Clad, Pine, 6 1/4", 4 15/16", Standard Sill, Mill Finish Sill, Black Composite Threshold
Exterior Color / Finish: Painted, Standard Enduraclad, Tan
Interior Color / Finish: Primed Interior
Sash / Panel: Putty Glaze, Ogee, Standard
Glass: Insulated Dual Tempered Low-E Advanced Low-E Insulating Glass Argon Non High Altitude
Performance Information: U-Factor 0.29, SHGC 0.16, VLT 0.28, CPD PEL-N-218-08884-00001, Performance Class LC, PG 55, Calculated Positive DP Rating 55, Calculated Negative DP Rating 70, Year Rated 11, STC 31, OITC 25
Grille: ILT, No Custom Grille, 1 1/4", Traditional (2W5H), Putty Glaze, Ogee
2: Non-Standard Size Active / Passive Double Inswing Door
Frame Size: 55 1/4 X 79 1/2
General Information: Standard, Clad, Pine, 6 1/4", 4 15/16", Standard Sill, Mill Finish Sill, Black Composite Threshold
Exterior Color / Finish: Painted, Standard Enduraclad, Tan
Interior Color / Finish: Primed Interior
Sash / Panel: Putty Glaze, Ogee, Standard
Glass: Insulated Dual Tempered Low-E Advanced Low-E Insulating Glass Argon Non High Altitude
Hardware Options: Standard, Satin Nickel, Order Handle Set, Multipoint Lock, No Integrated Sensor
Screen: Hinge Screen, Tan, Satin Nickel, InView™
Performance Information: U-Factor 0.29, SHGC 0.16, VLT 0.28, CPD PEL-N-218-07988-00001, Performance Class LC, PG 55, Calculated Positive DP Rating 55, Calculated Negative DP Rating 70, Year Rated 11, STC 31, OITC 25
Grille: ILT, No Custom Grille, 1 1/4", Traditional (2W5H / 2W5H), Putty Glaze, Ogee
3: 1880 Fixed Inswing Door Sidelight
Frame Size: 18 X 79 1/2
General Information: Standard, Clad, Pine, 6 1/4", 4 15/16", Standard Sill, Mill Finish Sill, Black Composite Threshold
Exterior Color / Finish: Painted, Standard Enduraclad, Tan
Interior Color / Finish: Primed Interior
Sash / Panel: Putty Glaze, Ogee, Standard
Glass: Insulated Dual Tempered Low-E Advanced Low-E Insulating Glass Argon Non High Altitude
Performance Information: U-Factor 0.29, SHGC 0.16, VLT 0.28, CPD PEL-N-218-08884-00001, Performance Class LC, PG 55, Calculated Positive DP Rating 55, Calculated Negative DP Rating 70, Year Rated 11, STC 31, OITC 25
Grille: ILT, No Custom Grille, 1 1/4", Traditional (2W5H), Putty Glaze, Ogee
Vertical Mull 1: FactoryMull, Standard Joining Mullion - Doors, Frame To Frame Width- 0", Mull Design Pressure- 20
Vertical Mull 2: FactoryMull, Standard Joining Mullion - Doors, Frame To Frame Width- 0", Mull Design Pressure- 20
Wrapping Information: Foldout Fins, Factory Applied, No Exterior Trim, 4 15/16", 6 1/4", Factory Applied, Pella Recommended Clearance, Perimeter Length = 342".

Product Selection Guide
- Size and Performance Data ISD-2
- Sound Transmission Class and Outdoor-Indoor Transmission Class ISD-3
- Features and Options ISD-4

Combination Assemblies ISD-5
Glazing Performance ISD-6
Impact-Resistant Glazing ISD-11
Grille Types
- Typical Grille Patterns ISD-13
- Custom Shapes ISD-14

Size Tables ISD-15
Special Sizes and Dimensions ISD-21
Design Data ISD-22
Detailed Product Descriptions
- Clad ISD-26
- Wood ISD-27

Unit Sections
- Wood Collection ISD-28
- Clad ISD-32
- Wood ISD-42
- Handle Hardware Dimensions ISD-46

Supporting documents for this product:

Test Reports:
https://media.pella.com/professional/adm/CertificationReports/Test_Reports_AS-Clad.pdf

CSI Specs (readable using Microsoft Word or other text editing application):
https://media.pella.com/professional/adm/Wood-CSI_Specs/08213-R.rtf

AIA Masterspec
(readable using Microsoft Word or other text editing application):
https://media.pella.com/professional/adm/Wood-CSI_Specs/Masterspec/085200_fl.doc

Detailed Product Description
(readable using Microsoft Word or other text editing application):
Clad: https://media.pella.com/professional/adm/Clad-Wood/PR-InSwingDoor-C.rtf
Wood: https://media.pella.com/professional/adm/Clad-Wood/PR-InSwingDoor-W.rtf

Size Tables (requires appropriate CAD software to read and use):
https://media.pella.com/professional/adm/Clad-Wood/AS-IF-OG-PT-Elev_D.dwg

CAD cross sections (requires appropriate CAD software to read and use):
https://media.pella.com/professional/adm/Clad-Wood/PRCW-IS-Detail_D.dwg

3D & BIM / REVIT (requires appropriate software to read and use):
https://media.pella.com/professional/adm/RevitFiles/PR-Revit/Door-In-Swing-Pella-Reserve-Traditional.zip

Sketchup (requires appropriate software to read and use):
https://media.pella.com/professional/adm/Clad-Wood/PellaSKP_PellaReserve_Traditional_Hinged_Door_In-Swing.zip

Combination Recommendations:
https://media.pella.com/professional/adm/Clad-Wood/D_Combinations.pdf

Installation Details:
https://media.pella.com/professional/adm/Clad-Wood/F_InstallationDetails.pdf

Impact-Resistant In-Swing Door, Complete Product Information:
https://media.pella.com/professional/adm/Clad-Wood/Pella-ImpactResistant_InSwingDoor.pdf

The information published in this document is believed to be accurate at the time of publication. However, because we are constantly working to improve our products, specifications are subject to change without notice. Consult your local Pella representative for up-to-date product information.
Microsoft and Microsoft Word are registered trademarks of Microsoft Corp.

Pella® Reserve™ Traditional In-Swing Patio Door

Size and Performance Data

	Clad	Wood
Sizes		
Standard door sizes	●	●
Standard sidelight sizes	●	●
Standard transom sizes—Fixed Frame Direct Set	●	●
Fixed casement	●	●
Wide stile casement	●	●
Special sizes	●	●
Custom sizes and shapes	●	●
Standard Single-Swing Single Door Widths		
2' 2"	●	●
2' 6"	●	●
2' 10"	●	●
3'	●	●
3' 2"	●	●
Standard Single-Swing Double Door Widths		
4' 2"	●	–
5'	●	–
5' 7"	●	–
6'	●	–
6' 3"	●	–
Standard Double-Swing Door Widths		
4' 2"	●	●
5'	●	●
5' 7"	●	●
6'	●	●
6' 3"	●	●
Standard Door Heights		
6' 7-1/2"	●	●
6' 10"	●	●
7' 2"	●	●
8' 0"	●	●
10' 0"	●	●

Double-Swing	Single-Swing Double	Single-Swing
Active/Passive	Active/Fixed	Active or Fixed

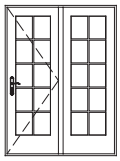

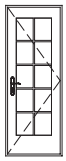

(—) = Not Available

(1) The higher the level, the greater the product's ability to resist forced entry. Valid only if Pella supplied locking system is used.

Pella® Reserve™ Traditional In-Swing Patio Door

Size and Performance Data

		Clad	Wood
Performance data [1]			
Doors 8' Tall and Under	**Standard Sill - Non-Impact Glazing**		
	Meets or Exceeds AAMA/WDMA Ratings	LC55 Hallmark Certified	LC55 Hallmark Certified
	Air Infiltration (cfm/ft² of frame @ 1.57 psf wind pressure)	0.15	0.15
	Water Resistance	8.36 psf	8.36 psf
	Design Pressure	55 psf	55 psf
	Low Profile Sill		
	Water Resistance	0 psf	0 psf
	Products with Impact-Resistant Glass		
	Meets or Exceeds AAMA/WDMA Ratings	LC55	LC55
	Air Infiltration (cfm/ft² of frame @ 1.57 psf wind pressure)	0.15	0.15
	Water Resistance	8.36 psf	8.36 psf
	Design Pressure	55 psf	55 psf
Doors Over 8' Tall up to 10'	**Standard Sill - Non-Impact Glazing**		
	Meets or Exceeds AAMA/WDMA Ratings	LC40 Hallmark Certified	LC40 Hallmark Certified
	Air Infiltration (cfm/ft² of frame @ 1.57 psf wind pressure)	0.15	0.15
	Water Resistance	7.52 psf	7.52 psf
	Design Pressure	40 psf	40 psf
	Low Profile Sill		
	Water Resistance	0 psf	0 psf
	Products with Impact-Resistant Glass		
	Meets or Exceeds AAMA/WDMA Ratings	LC40	LC40
	Air Infiltration (cfm/ft² of frame @ 1.57 psf wind pressure)	0.15	0.15
	Water Resistance	7.52 psf	7.52 psf
	Design Pressure	40 psf	40 psf

Other Performance Criteria	
Forced Entry Resistance Level (Minimum Security Grade)[2]	40

Sound Transmission Class / Outdoor-Indoor Transmission Class

Product	Frame Size Tested[3]	Glazing System: Overall Glazing Thickness	Glazing System: Exterior Glass Thickness	Glazing System: Interior Glass Thickness	Glazing System: Third Pane Thickness	STC Rating	OITC Rating
Clad In-Swing	**Without Grilles**						
	71-1/4" x 81-1/2"	13/16"	3mm	3mm	—	31	25
	71-1/4" x 81-1/2"	13/16"	3mm	7.6mm PVB	—	34	28
Clad In-Swing with Impact-Resistant Glass	**Without Grilles**						
	71-1/4" x 81-1/2"	7/8"	8.6mm PVB	4.7mm	—	33	30

(—) = Not Available

(1) Maximum performance for single unit when glazed with the appropriate glass thickness. Doors supplied without latching hardware are not AAMA/WDMA performance certified. See Design Data pages in this section for specific product performance class and grade values.

(2) The higher the level, the greater the product's ability to resist forced entry. Valid only if Pella supplied locking system is used.

(3) ASTM E 1425 defines standard sizes for acoustical testing. Ratings achieved at that size are representative of all sizes of the same configuration.

NOTE: Performance with additional options may not be the same as Standard and Special size units. Please contact your local Pella representative for complete information.

Pella® Reserve™ Traditional In-Swing Patio Door

Features and Options

Standard	Options / Upgrades
Glazing	
Glazing Type	
Dual-Pane Insulating Glass	Triple-Pane Insulating Glass
Insulated Glass Options/Low-E Types	
Advanced Low-E	SunDefense™ Low-E
	SunDefense+ Low-E
	AdvancedComfort Low-E
	NaturalSun Low-E
	NaturalSun+ Low-E
	Clear (no Low-E coating)
Additional Glass Options	
Tempered Glass	Obscure Glass[1]
	Tinted Glass (Bronze, Gray and Green)
	Impact-Resistant Laminated Glass
Gas Fill/High Altitude	
Argon	High altitude
Wood Types	
Pine	Mahogany, Douglas Fir
Exterior	
EnduraClad® protective finish	EnduraClad Plus protective finish
	Factory Primed Pine wood exterior
	Unfinished Mahogany wood exterior
Cladding Colors	
Standard colors[1]	Feature Colors, Custom Colors[1]
Sill Finish[2]	
Black	Mill finish
	Satin nickel anodized
	Bronze anodized
Interior	
Unfinished wood	Factory primed[3], Factory prefinished paint[3], Factory prefinished stain
Hardware	
White, Champagne, Brown, Matte Black	Satin Brass, Satin Nickel, Oil-Rubbed Bronze,
Locking System	
Multi-Point	—
Key lock	—
Grilles	
Integral Light Technology® Grilles	
—	Traditional, Prairie, Top Row, Cross, New England, Victorian, Custom
Grilles-Between-the-Glass	
—	Traditional, Prairie, Top Row, Cross, Custom-Equally Divided
Screens	
—	InView™ screens

(1) Contact your local Pella sales representative for current designs and color options.
(2) ADA sill finishes available in mill or bronze anodized only.
(3) Not available on Mahogany and Douglas Fir interiors.

Combinations

Combinations are a great way to create visual interest in any project. A combination is an assembly formed by two or more separate windows or doors whose frames are mulled together by a combination or reinforcing mullion.

Pella window combinations are available in an endless variety of arrangements. Below are examples of common configurations, see the Combinations Recommendations document for typical mullions, requirements and limitations.

Contact your local Pella sales representative for more information.

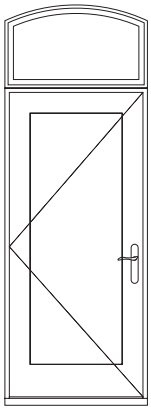

Arch Head over Single

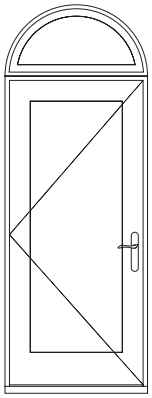

Half Circle over Single

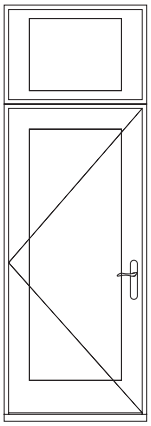

Transom over Single [1]

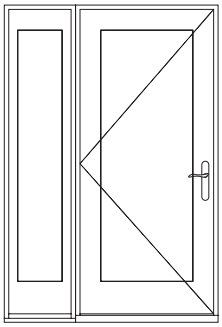

Single with Left Sidelight

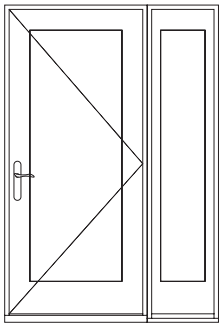

Single with Right Sidelight

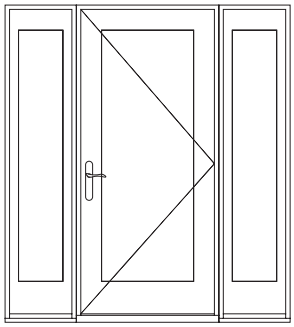

Single with Double Sidelight

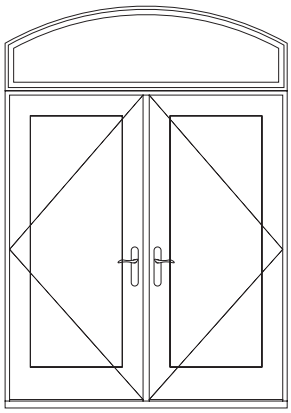

Arch Head over Double

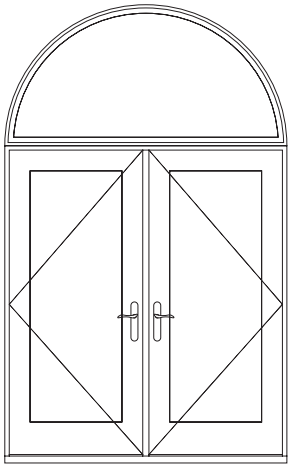

Half Circle over Double

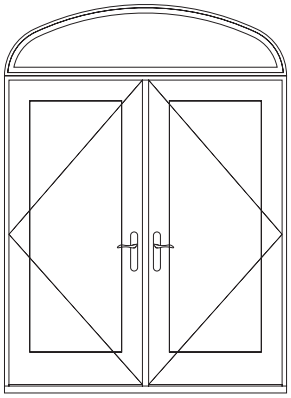

Elliptical over Double

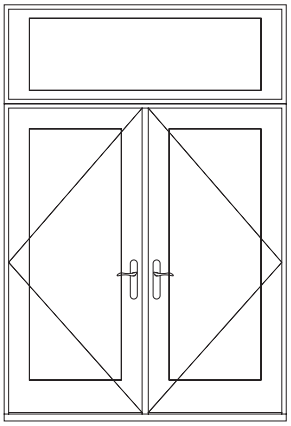

Transom over Double

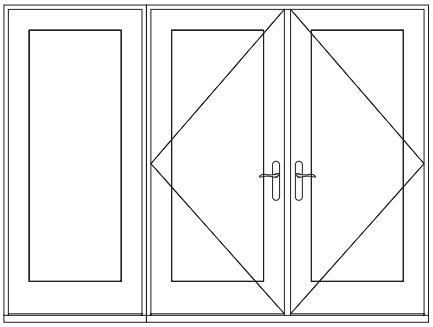

Double with Single Left

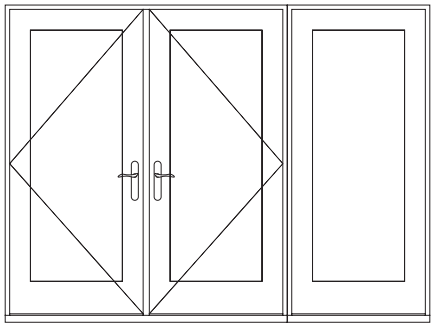

Double with Single Right

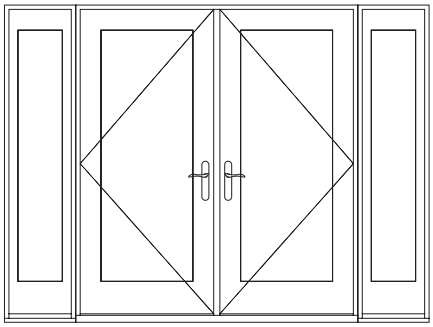

Double with Double Sidelights

(1) Other rectangular profiles are also available as combination options.

Pella® Reserve™ Traditional In-Swing Patio Door

Glazing Performance - Total Unit

Glazing Thickness	Type of Glazing	NFRC Certified Product #	Glass (mm) Ext.	Glass (mm) Int.	Gap Fill	Performance Values 1 U-Factor	SHGC	VLT	CR	Shaded Areas Meet ENERGY STAR® Performance Criteria in Zones Shown: U. S. Zone N	NC	SC	S	Canada 2 ER	Canada 2 Zone CA
Vent Dual-Pane Glazing - Aluminum-Clad Exterior															
13/16"	Clear IG	PEL-N-218-07953-00001	3	3	air	0.40	0.44	0.46	48						
	with grilles-between-the-glass	PEL-N-218-07954-00001				0.40	0.38	0.39	48						
	with integral grilles	PEL-N-218-07955-00001				0.40	0.38	0.39	48						
13/16"	Advanced Low-E IG	PEL-N-218-07985-00001	3	3	argon	0.27	0.21	0.39	61			SC	S		
	with grilles-between-the-glass	PEL-N-218-07986-00001				0.27	0.18	0.33	61			SC	S		
	with integral grilles	PEL-N-218-07987-00001				0.28	0.18	0.33	61			SC	S		
13/16"	SunDefense™ Low-E IG	PEL-N-218-07961-00001	3	3	argon	0.27	0.16	0.36	61			SC	S		
	with grilles-between-the-glass	PEL-N-218-07962-00001				0.27	0.14	0.31	61			SC	S		
	with integral grilles	PEL-N-218-07963-00001				0.28	0.14	0.31	61			SC	S		
13/16"	SunDefense+ Low-E IG	PEL-N-218-11573-00001	3	3	argon	0.24	0.16	0.35	48	N	NC	SC	S		
	with grilles-between-the-glass	PEL-N-218-11574-00001				0.24	0.14	0.30	48	N	NC	SC	S		
	with integral grilles	PEL-N-218-11575-00001				0.25	0.14	0.30	48	N	NC	SC	S		
13/16"	AdvancedComfort Low-E IG	PEL-N-218-07969-00001	3	3	argon	0.24	0.21	0.38	48	N	NC	SC	S		
	with grilles-between-the-glass	PEL-N-218-07970-00001				0.24	0.18	0.33	48	N	NC	SC	S		
	with integral grilles	PEL-N-218-07971-00001				0.25	0.18	0.33	48	N	NC	SC	S		
13/16"	NaturalSun Low-E IG	PEL-N-218-07977-00001	3	3	argon	0.28	0.39	0.44	60						
	with grilles-between-the-glass	PEL-N-218-07978-00001				0.28	0.34	0.38	60						
	with integral grilles	PEL-N-218-07979-00001				0.29	0.34	0.38	60						
13/16"	NaturalSun+ Low-E IG	PEL-N-218-11541-00001	3	3	argon	0.25	0.36	0.43	47	N	NC				
	with grilles-between-the-glass	PEL-N-218-11542-00001				0.25	0.31	0.37	47	N	NC				
	with integral grilles	PEL-N-218-11543-00001				0.26	0.31	0.37	47	N	NC				
Tinted Glazing															
13/16"	Bronze Advanced Low-E IG	PEL-N-218-08029-00001	5	3	argon	0.27	0.19	0.25	62			SC	S		
	with grilles-between-the-glass	PEL-N-218-08030-00001				0.27	0.16	0.22	62			SC	S		
	with integral grilles	PEL-N-218-08031-00001				0.28	0.16	0.22	62			SC	S		
13/16"	Gray Advanced Low-E IG	PEL-N-218-08037-00001	5	3	argon	0.27	0.17	0.22	62			SC	S		
	with grilles-between-the-glass	PEL-N-218-08038-00001				0.27	0.15	0.19	62			SC	S		
	with integral grilles	PEL-N-218-08039-00001				0.28	0.15	0.19	62			SC	S		
13/16"	Green Advanced Low-E IG	PEL-N-218-08045-00001	5	3	argon	0.27	0.21	0.34	62			SC	S		
	with grilles-between-the-glass	PEL-N-218-08046-00001				0.27	0.18	0.29	62			SC	S		
	with integral grilles	PEL-N-218-08047-00001				0.28	0.18	0.29	62			SC	S		
High Altitude Glazing															
13/16"	Advanced Low-E IG	PEL-N-218-07981-00001	3	3	air	0.30	0.21	0.39	58						
	with grilles-between-the-glass	PEL-N-218-07982-00001				0.30	0.19	0.33	58						
	with integral grilles	PEL-N-218-07983-00001				0.31	0.19	0.33	58						
13/16"	SunDefense Low-E IG	PEL-N-218-07957-00001	3	3	air	0.30	0.16	0.36	58						
	with grilles-between-the-glass	PEL-N-218-07958-00001				0.30	0.14	0.31	58						
	with integral grilles	PEL-N-218-07959-00001				0.30	0.14	0.31	58						
13/16"	SunDefense+ Low-E IG	PEL-N-218-11569-00001	3	3	air	0.26	0.16	0.35	45	N	NC	SC	S		
	with grilles-between-the-glass	PEL-N-218-11570-00001				0.26	0.14	0.30	45	N	NC	SC	S		
	with integral grilles	PEL-N-218-11571-00001				0.27	0.14	0.30	45			SC	S		
13/16"	AdvancedComfort Low-E IG	PEL-N-218-07965-00001	3	3	air	0.26	0.21	0.38	45	N	NC	SC	S		
	with grilles-between-the-glass	PEL-N-218-07966-00001				0.26	0.18	0.33	45	N	NC	SC	S		
	with integral grilles	PEL-N-218-07967-00001				0.27	0.18	0.33	45			SC	S		
13/16"	NaturalSun Low-E IG	PEL-N-218-07973-00001	3	3	air	0.30	0.39	0.44	57						
	with grilles-between-the-glass	PEL-N-218-07974-00001				0.30	0.34	0.38	57						
	with integral grilles	PEL-N-218-07975-00001				0.31	0.34	0.38	57						
13/16"	NaturalSun+ Low-E IG	PEL-N-218-11537-00001	3	3	air	0.26	0.35	0.43	44	N	NC				
	with grilles-between-the-glass	PEL-N-218-11538-00001				0.26	0.31	0.37	44	N	NC				
	with integral grilles	PEL-N-218-11539-00001				0.27	0.31	0.37	44						

R-Value = 1/U-Factor
SHGC = Solar Heat Gain Coefficient
VLT % = Visible Light Transmission
CR = Condensation Resistance
ER = Canadian Energy Rating

Climate Zones

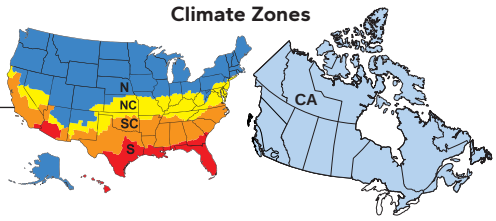

(1) Glazing performance values are calculated for Pine using NFRC 100, NFRC 200 and NFRC 500. Thermal performance of other wood species may vary. ENERGY STAR® values are updated to 2023 (Version 7) criteria.

(2) The values shown are based on Canada's updated ENERGY STAR® 2020 initiative.

U-Factor values shown are based on a standard sill and pine interior.

For center-glass values, see the Product Performance section.

Visit www.energystar.gov for Energy Star guidelines.

Pella® Reserve™ Traditional In-Swing Patio Door

Glazing Performance - Total Unit

Glazing Thickness	Type of Glazing	NFRC Certified Product #	Glass (mm)			Gap Fill	Performance Values[1]				Shaded Areas Meet ENERGY STAR® Performance Criteria in Zones Shown					
			Ext.	Mid.	Int.		U-Factor	SHGC	VLT	CR	U. S. Zone				Canada[2] ER	Canada[2] Zone
Vent Triple-Pane Glazing - Aluminum-Clad Exterior											N	NC	SC	S		CA
1"	Advanced Low-E IG	PEL-N-218-08345-00001	3	3	3	argon	0.22	0.19	0.35	70	N	NC	SC	S		
	with grilles-between-the-glass	PEL-N-218-08346-00001					0.23	0.17	0.29	70	N	NC	SC	S		
	with integral grilles	PEL-N-218-08347-00001					0.23	0.17	0.29	70	N	NC	SC	S		
1"	SunDefense™ Low-E IG	PEL-N-218-08357-00001	3	3	3	argon	0.22	0.15	0.32	70	N	NC	SC	S		
	with grilles-between-the-glass	PEL-N-218-08358-00001					0.23	0.13	0.27	70	N	NC	SC	S		
	with integral grilles	PEL-N-218-08359-00001					0.23	0.13	0.27	70	N	NC	SC	S		
1"	NaturalSun Low-E IG	PEL-N-218-08333-00001	3	3	3	argon	0.23	0.32	0.39	70	N	NC				
	with grilles-between-the-glass	PEL-N-218-08334-00001					0.23	0.28	0.33	70	N	NC				
	with integral grilles	PEL-N-218-08335-00001					0.23	0.28	0.33	70	N	NC				
High Altitude Glazing																
1"	Advanced Low-E IG	PEL-N-218-08341-00001	3	3	3	air	0.25	0.19	0.35	66	N	NC	SC	S		
	with grilles-between-the-glass	PEL-N-218-08342-00001					0.26	0.17	0.29	66	N	NC	SC	S		
	with integral grilles	PEL-N-218-08343-00001					0.25	0.17	0.29	66	N	NC	SC	S		
1"	SunDefense Low-E IG	PEL-N-218-08353-00001	3	3	3	air	0.25	0.15	0.32	66	N	NC	SC	S		
	with grilles-between-the-glass	PEL-N-218-08354-00001					0.26	0.13	0.27	66	N	NC	SC	S		
	with integral grilles	PEL-N-218-08355-00001					0.25	0.13	0.27	66	N	NC	SC	S		
1"	NaturalSun Low-E IG	PEL-N-218-08329-00001	3	3	3	air	0.25	0.32	0.39	66	N	NC				
	with grilles-between-the-glass	PEL-N-218-08330-00001					0.26	0.28	0.33	66	N	NC				
	with integral grilles	PEL-N-218-08331-00001					0.26	0.28	0.33	66	N	NC				

R-Value = 1/U-Factor
SHGC = Solar Heat Gain Coefficient
VLT % = Visible Light Transmission
CR = Condensation Resistance
ER = Canadian Energy Rating

(1) Glazing performance values are calculated for Pine using NFRC 100, NFRC 200 and NFRC 500. Thermal performance of other wood species may vary. ENERGY STAR® values are updated to 2023 (Version 7) criteria.

(2) The values shown are based on Canada's updated ENERGY STAR® 2020 initiative.

U-Factor values shown are based on a standard sill and pine interior.

For center-glass values, see the Product Performance section.

Visit www.energystar.gov for Energy Star guidelines.

Climate Zones

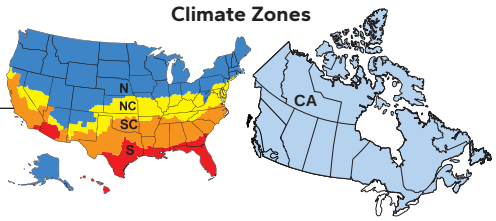

Pella® Reserve™ Traditional In-Swing Patio Door

Glazing Performance - Total Unit

Glazing Thickness	Type of Glazing	NFRC Certified Product #	Glass (mm) Ext.	Glass (mm) Int.	Gap Fill	Performance Values[1] U-Factor	SHGC	VLT	CR	Shaded Areas Meet ENERGY STAR® Performance Criteria in Zones Shown: U. S. Zone				Canada[2] ER	Canada[2] Zone
Vent Dual-Pane Glazing - Wood Exterior										N	NC	SC	S		CA
13/16"	Clear IG	PEL-N-215-06521-00001	3	3	Air	0.39	0.44	0.46	46						
	with grilles-between-the-glass	PEL-N-215-06522-00001				0.39	0.38	0.39	46						
	with integral grilles	PEL-N-215-06523-00001				0.40	0.38	0.39	46						
13/16"	Advanced Low-E IG	PEL-N-215-06537-00001	3	3	Argon	0.27	0.21	0.39	59			SC	S		
	with grilles-between-the-glass	PEL-N-215-06538-00001				0.27	0.18	0.33	59			SC	S		
	with integral grilles	PEL-N-215-06539-00001				0.28	0.18	0.33	59			SC	S		
13/16"	SunDefense™ Low-E IG	PEL-N-215-06529-00001	3	3	Argon	0.27	0.16	0.36	46			SC	S		
	with grilles-between-the-glass	PEL-N-215-06530-00001				0.27	0.14	0.31	46			SC	S		
	with integral grilles	PEL-N-215-06531-00001				0.27	0.14	0.31	46			SC	S		
13/16"	SunDefense+ Low-E IG	PEL-N-215-08533-00001	3	3	argon	0.24	0.16	0.35	39	N	NC	SC	S		
	with grilles-between-the-glass	PEL-N-215-08534-00001				0.24	0.14	0.30	39	N	NC	SC	S		
	with integral grilles	PEL-N-215-08535-00001				0.25	0.14	0.30	39	N	NC	SC	S		
13/16"	AdvancedComfort Low-E IG	PEL-N-215-06553-00001	3	3	Argon	0.24	0.21	0.38	58	N	NC	SC	S		
	with grilles-between-the-glass	PEL-N-215-06554-00001				0.24	0.18	0.33	58	N	NC	SC	S		
	with integral grilles	PEL-N-215-06555-00001				0.25	0.18	0.33	58	N	NC	SC	S		
13/16"	NaturalSun Low-E IG	PEL-N-215-06545-00001	3	3	Argon	0.28	0.39	0.44	59						
	with grilles-between-the-glass	PEL-N-215-06546-00001				0.28	0.34	0.38	59						
	with integral grilles	PEL-N-215-06547-00001				0.28	0.34	0.38	59						
13/16"	NaturalSun+ Low-E IG	PEL-N-215-08509-00001	3	3	argon	0.24	0.36	0.43	49	N	NC				
	with grilles-between-the-glass	PEL-N-215-08510-00001				0.24	0.31	0.37	49	N	NC				
	with integral grilles	PEL-N-215-08511-00001				0.25	0.31	0.37	49	N	NC				
Tinted Glazing															
13/16"	Bronze Advanced Low-E IG	PEL-N-215-06573-00002	5	3	Argon	0.27	0.19	0.25	58			SC	S		
	with grilles-between-the-glass	PEL-N-215-06574-00002				0.27	0.17	0.22	62			SC	S		
	with integral grilles	PEL-N-215-06575-00002				0.28	0.17	0.22	58			SC	S		
13/16"	Gray Advanced Low-E IG	PEL-N-215-06573-00003	5	3	Argon	0.27	0.17	0.22	58			SC	S		
	with grilles-between-the-glass	PEL-N-215-06574-00003				0.27	0.15	0.19	62			SC	S		
	with integral grilles	PEL-N-215-06575-00003				0.28	0.15	0.19	58			SC	S		
13/16"	Green Advanced Low-E IG	PEL-N-215-06573-00004	5	3	Argon	0.27	0.21	0.34	58			SC	S		
	with grilles-between-the-glass	PEL-N-215-06574-00004				0.27	0.19	0.29	62			SC	S		
	with integral grilles	PEL-N-215-06575-00004				0.28	0.19	0.29	58			SC	S		
High Altitude Glazing															
13/16"	Advanced Low-E IG	PEL-N-215-06533-00001	3	3	Air	0.30	0.21	0.39	46						
	with grilles-between-the-glass	PEL-N-215-06534-00001				0.30	0.19	0.33	46						
	with integral grilles	PEL-N-215-06535-00001				0.30	0.19	0.33	46						
13/16"	SunDefense Low-E IG	PEL-N-215-06525-00001	3	3	Air	0.29	0.16	0.36	46						
	with grilles-between-the-glass	PEL-N-215-06526-00001				0.29	0.14	0.31	46						
	with integral grilles	PEL-N-215-06527-00001				0.30	0.14	0.31	46						
13/16"	SunDefense+ Low-E IG	PEL-N-215-08529-00001	3	3	air	0.25	0.16	0.35	49	N	NC	SC	S		
	with grilles-between-the-glass	PEL-N-215-08530-00001				0.25	0.14	0.30	49	N	NC	SC	S		
	with integral grilles	PEL-N-215-08531-00001				0.26	0.14	0.30	52	N	NC	SC	S		
13/16"	AdvancedComfort Low-E IG	PEL-N-215-06549-00001	3	3	Air	0.26	0.21	0.38	62	N	NC	SC	S		
	with grilles-between-the-glass	PEL-N-215-06550-00001				0.26	0.18	0.33	62	N	NC	SC	S		
	with integral grilles	PEL-N-215-06551-00001				0.26	0.18	0.33	62	N	NC	SC	S		
13/16"	NaturalSun Low-E IG	PEL-N-215-06541-00001	3	3	Air	0.30	0.39	0.44	63						
	with grilles-between-the-glass	PEL-N-215-06542-00001				0.30	0.34	0.38	63						
	with integral grilles	PEL-N-215-06543-00001				0.31	0.34	0.38	63						
13/16"	NaturalSun+ Low-E IG	PEL-N-215-08505-00001	3	3	air	0.26	0.36	0.43	41	N	NC				
	with grilles-between-the-glass	PEL-N-215-08506-00001				0.26	0.31	0.37	41	N	NC				
	with integral grilles	PEL-N-215-08507-00001				0.27	0.31	0.37	41						

R-Value = 1/U-Factor, SHGC = Solar Heat Gain Coefficient
VLT % = Visible Light Transmission, CR = Condensation Resistance
ER = Canadian Energy Rating

(1) Glazing performance values are calculated for Pine using NFRC 100, NFRC 200 and NFRC 500. Thermal performance of other wood species may vary. ENERGY STAR® values are updated to 2023 (Version 7) criteria.

(2) The values shown are based on Canada's updated ENERGY STAR® 2020 initiative.

U-Factor values shown are based on a standard sill and pine interior.

For center-glass values, see the Product Performance section.

Visit www.energystar.gov for Energy Star guidelines.

Climate Zones

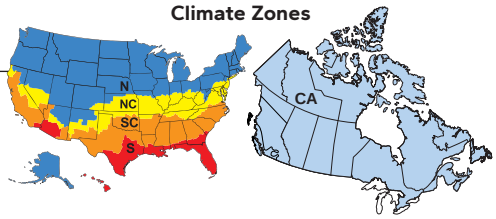

Pella® Reserve™ Traditional In-Swing Patio Door

Glazing Performance - Total Unit

Glazing Thickness	Type of Glazing	NFRC Certified Product #	Glass (mm)			Gap Fill	Performance Values 1				Shaded Areas Meet ENERGY STAR® Performance Criteria in Zones Shown					
			Ext.	Mid.	Int.		U-Factor	SHGC	VLT	CR	U. S. Zone				Canada 2 ER	Canada 2 Zone
Vent Triple-Pane Glazing - Wood Exterior											N	NC	SC	S		CA
1"	Advanced Low-E IG	PEL-N-215-06713-00001	3	3	3	Argon	0.22	0.19	0.35	64	N	NC	SC	S		
	with grilles-between-the-glass	PEL-N-215-06714-00001					0.23	0.17	0.29	64	N	NC	SC	S		
	with integral grilles	PEL-N-215-06715-00001					0.23	0.17	0.29	64	N	NC	SC	S		
1"	SunDefense™ Low-E IG	PEL-N-215-06725-00001	3	3	3	Argon	0.22	0.15	0.32	68	N	NC	SC	S		
	with grilles-between-the-glass	PEL-N-215-06726-00001					0.23	0.13	0.27	68	N	NC	SC	S		
	with integral grilles	PEL-N-215-06727-00001					0.22	0.13	0.27	68	N	NC	SC	S		
1"	NaturalSun Low-E IG	PEL-N-215-06701-00001	3	3	3	Argon	0.22	0.32	0.39	67	N	NC				
	with grilles-between-the-glass	PEL-N-215-06702-00001					0.23	0.28	0.33	67	N	NC				
	with integral grilles	PEL-N-215-06703-00001					0.23	0.28	0.33	67	N	NC				
High Altitude Glazing																
1"	Advanced Low-E IG	PEL-N-215-06709-00001	3	3	3	Air	0.25	0.20	0.35	68	N	NC	SC	S		
	with grilles-between-the-glass	PEL-N-215-06710-00001					0.25	0.17	0.29	68	N	NC	SC	S		
	with integral grilles	PEL-N-215-06711-00001					0.25	0.17	0.29	68	N	NC	SC	S		
1"	SunDefense Low-E IG	PEL-N-215-06721-00001	3	3	3	Air	0.25	0.15	0.32	69	N	NC	SC	S		
	with grilles-between-the-glass	PEL-N-215-06722-00001					0.25	0.13	0.27	69	N	NC	SC	S		
	with integral grilles	PEL-N-215-06723-00001					0.25	0.13	0.27	69	N	NC	SC	S		
1"	NaturalSun Low-E IG	PEL-N-215-06697-00001	3	3	3	Air	0.25	0.32	0.39	69	N	NC				
	with grilles-between-the-glass	PEL-N-215-06698-00001					0.25	0.28	0.33	69	N	NC				
	with integral grilles	PEL-N-215-06699-00001					0.25	0.28	0.33	69	N	NC				

R-Value = 1/U-Factor
SHGC = Solar Heat Gain Coefficient
VLT % = Visible Light Transmission
CR = Condensation Resistance
ER = Canadian Energy Rating

(1) Glazing performance values are calculated for Pine using NFRC 100, NFRC 200 and NFRC 500. Thermal performance of other wood species may vary. ENERGY STAR® values are updated to 2023 (Version 7) criteria.

(2) The values shown are based on Canada's updated ENERGY STAR® 2020 initiative.

U-Factor values shown are based on a standard sill and pine interior.

For center-glass values, see the Product Performance section.

Visit www.energystar.gov for Energy Star guidelines.

Climate Zones

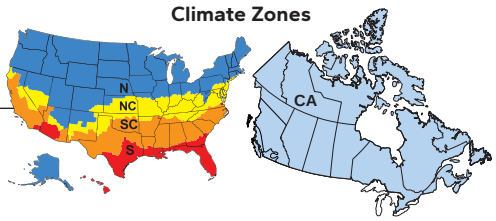

Pella® Reserve™ Traditional In-Swing Patio Door

Glazing Performance - Total Unit

Glazing Thickness	Type of Glazing	NFRC Certified Product #	Glass (mm)		Gap Fill	Performance Values[1]				Shaded Areas Meet ENERGY STAR® Performance Criteria in Zones Shown					
			Ext.	Int.		U-Factor	SHGC	VLT	CR	U. S.				Canada[2]	
										Zone				ER	Zone
Vent - Laminated Impact-Resistant Glass										N	NC	SC	S		CA
7/8"	Clear IG	PEL-N-218-08281-00001	8	5	air	0.41	0.38	0.44	43						
	with grilles-between-the-glass	PEL-N-218-08282-00001				0.42	0.33	0.38	43						
	with integral grilles	PEL-N-218-08283-00001				0.42	0.33	0.38	43						
7/8"	Advanced Low-E IG	PEL-N-218-08285-00001	8	5	argon	0.29	0.21	0.38	58						
	with grilles-between-the-glass	PEL-N-218-08286-00001				0.30	0.18	0.33	58						
	with integral grilles	PEL-N-218-08287-00001				0.30	0.18	0.33	58						
7/8"	SunDefense™ Low-E IG	PEL-N-218-08289-00001	8	5	argon	0.28	0.17	0.35	58			SC	S		
	with grilles-between-the-glass	PEL-N-218-08290-00001				0.30	0.15	0.30	58						
	with integral grilles	PEL-N-218-08291-00001				0.30	0.15	0.30	58						
Tinted Laminated Impact-Resistant Glass															
7/8"	Bronze Advanced Low-E IG	PEL-N-218-08293-00001	8	5	air	0.41	0.26	0.18	44						
	with grilles-between-the-glass	PEL-N-218-08294-00001				0.42	0.23	0.15	44						
	with integral grilles	PEL-N-218-08295-00001				0.41	0.23	0.15	44						
7/8"	Gray Advanced Low-E IG	PEL-N-218-08297-00001	8	5	air	0.41	0.29	0.21	44						
	with grilles-between-the-glass	PEL-N-218-08298-00001				0.42	0.25	0.18	44						
	with integral grilles	PEL-N-218-08299-00001				0.41	0.25	0.18	44						
7/8"	Green Advanced Low-E IG	PEL-N-218-08301-00001	8	5	air	0.41	0.34	0.36	44						
	with grilles-between-the-glass	PEL-N-218-08302-00001				0.42	0.30	0.31	44						
	with integral grilles	PEL-N-218-08303-00001				0.41	0.30	0.31	44						

R-Value = 1/U-Factor
SHGC = Solar Heat Gain Coefficient
VLT % = Visible Light Transmission
CR = Condensation Resistance
ER = Canadian Energy Rating

(1) Glazing performance values are calculated for Pine using NFRC 100, NFRC 200 and NFRC 500. Thermal performance of other wood species may vary. ENERGY STAR® values are updated to 2023 (Version 7) criteria.

(2) The values shown are based on Canada's updated ENERGY STAR® 2020 initiative.

U-Factor values shown are based on a standard sill and pine interior.

For center-glass values, see the Product Performance section.

Visit www.energystar.gov for Energy Star guidelines.

Climate Zones

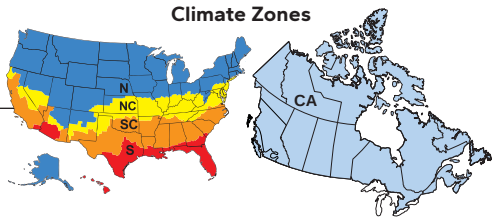

Pella® Reserve™ Traditional In-Swing Patio Door

Impact-Resistant Glass

For a complete list of ratings, refer to the Impact-Resistant product section.

	Clad
	7/8" Insulated Glass PVB
Maximum Performance Grade [1]	
Vent units 6' 10" tall and under	+55 / -70
Vent units 8' 0" tall and under	+55 / -70
Vent units over 8' 0" tall up to 10' 0" tall	+40 / -40
Fixed units 6' 10" tall and under	+55 / -70
Fixed units 8' 0" tall and under	+55 / -70
Fixed units over 8' 0" tall up to 10' 0" tall	+55 / -70
Certification	
Miami-Dade County	—
Hallmark	411-H-1164
FPAS	FL14293
TDI	DR-635

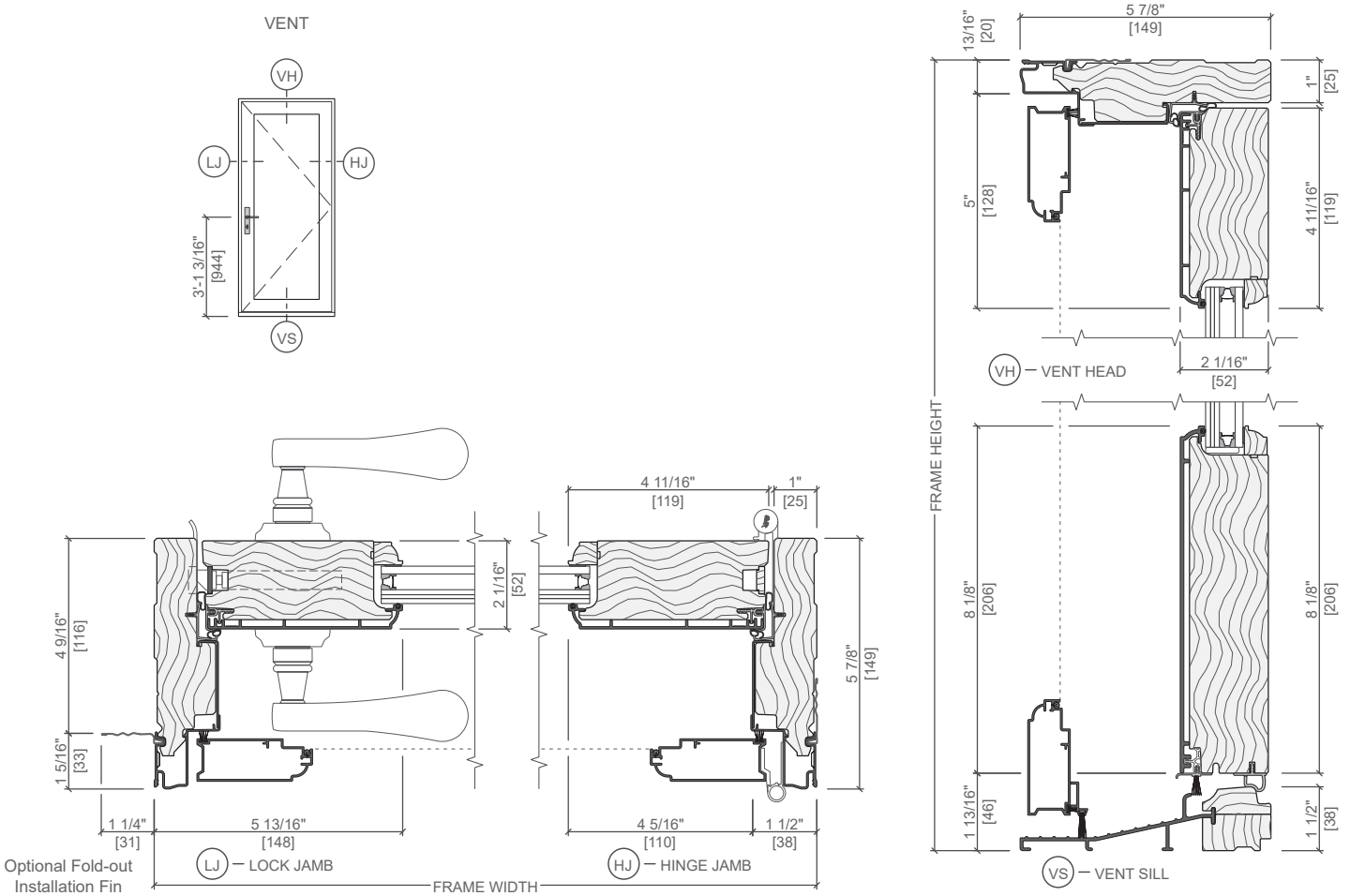

(—) = Not applicable.
(1) Units are tested for air/water/structural and impact-resistance, and certified for wind zone 4, large missile rating D.
For clear opening, vent area, visible glass, and frame area, see clad Design Data pages.
To convert areas to square meters (m2), multiply square feet by 0.0929.
Doors with low profile sills, curved glass in rectangular panel, custom stiles and rails, and no-lock no-bore hardware options are not certified to above standards.

Grille Profiles

Traditional Style Collection - Integral Light Technology ®

Putty Glaze and Ogee Grilles
Clad Exterior - Wood Interior

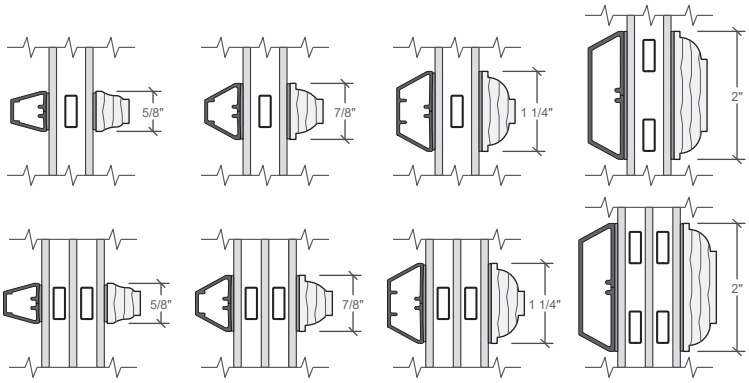

5/8" Regular | 7/8" Regular | 1 1/4" Regular | 2" Regular

Putty Glaze and Ogee Grilles
Wood Exterior - Wood Interior

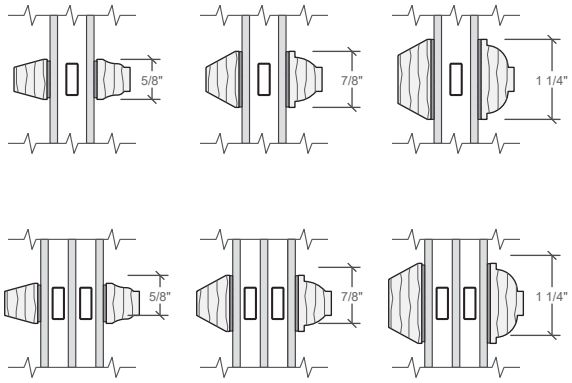

5/8" Regular | 7/8" Regular | 1 1/4" Regular

Ogee Grilles
Clad Exterior - Wood Interior

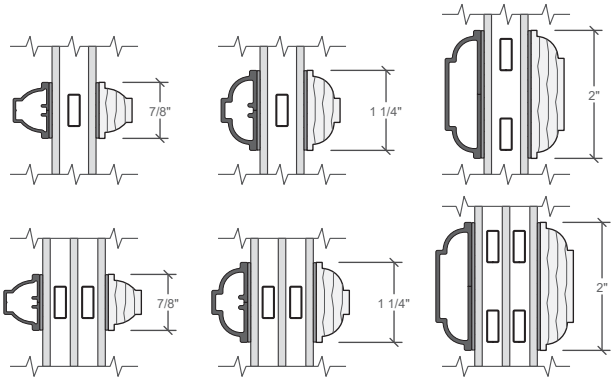

7/8" Regular | 1 1/4" Regular | 2" Regular

Grilles-Between-the-Glass

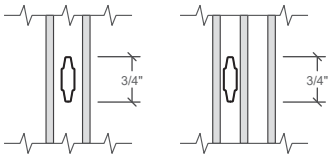

3/4" Contoured | 3/4" Contoured

Interior wood Integral Light Technology grilles available in Pine, Mahogany or Douglas Fir to match complete unit.

Grille Patterns

Integral Light Technology® Grilles

Prairie Lite Patterns

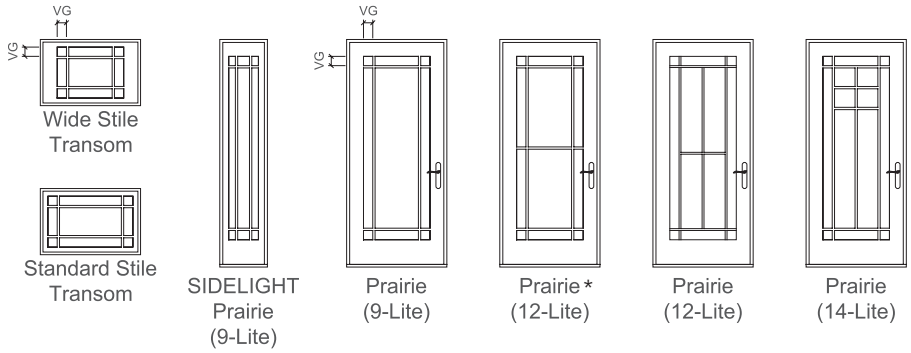

All sidelights and transoms will have 9 lights.

Standard corner lite dimension for Prairie patterns = 3-1/2" VG.

Integral Light Technology Grilles

- 9-Lite available in all standard and special sizes.
- 12-Lite available at 8' height; other heights available per custom drawing.
- 14-Lite available in units > 2' 1-1/2" width.

Other Available Patterns

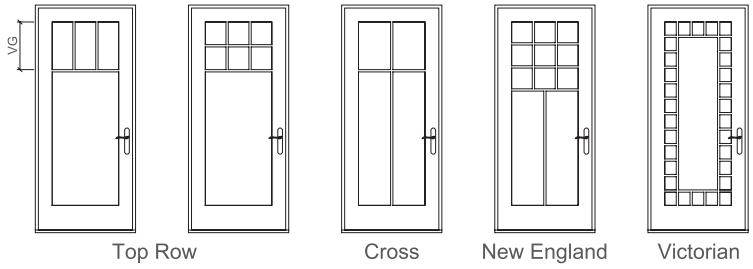

Top Row

- Standard visible glass to separator bar = 14" or half of total visible glass height, whichever is smaller.

Cross

- Standard visible glass to separator bar = one-quarter of total visible glass height.

New England

- Standard visible glass to separator bar = half of total visible glass height.

Grilles-Between-the-Glass

Prairie Lite Patterns

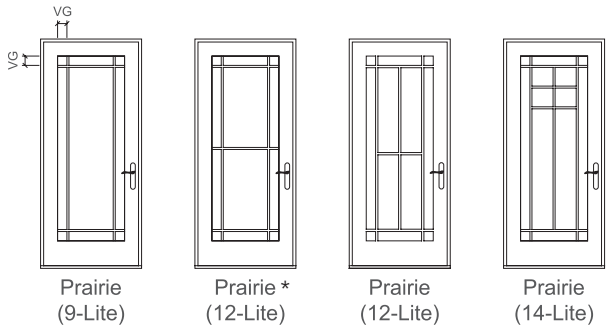

Prairie

- Standard corner lite dimension = 3-1/2" VG.
- 9-Lite available in units < 7' 0-3/4" height.
- * Prairie in heights > 7' 0-1/2" will have 12 lites.
- 12-Lite available in units ≤ 7' 2" height.

Other Available Patterns

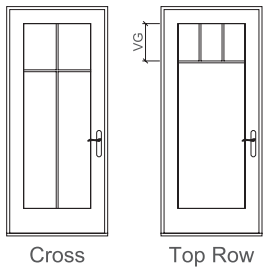

Cross

- Horizontal bar is 1/4 of visible glass from the top in door panels.
- Not available in transoms.

Top Row

- Horizontal bar may be ordered 12", 14" or 16" from the top VG.
- Transoms with frame heights ≥ 21", the horizontal bar will be positioned at 1/2 the visible glass height.
- Top Row not available in transoms with frame height <21".

For traditional patterns, see size tables.

VG = Visible Glass

Lite dimensions noted can vary.

Custom configurations are available; for details contact your local Pella sales representative.

Custom Shapes

Pella Reserve In-Swing French doors are available in the additional shapes shown below, as well as custom shapes. For specifications, size limitations, and details on these units, contact your local Pella sales representative.

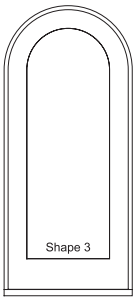

Full
Springline

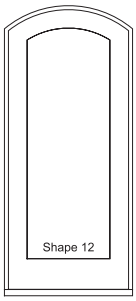

Full
Arch Head

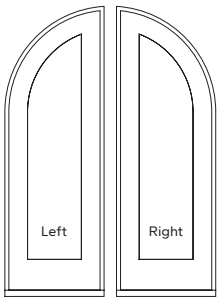

Partial Springline

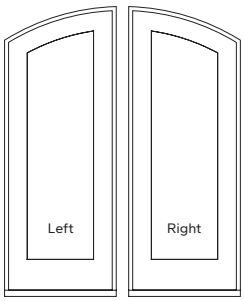

Partial Arch Head

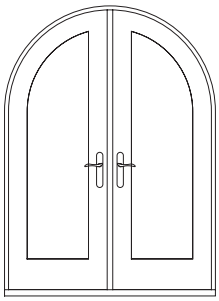

Shape 3
Full Springline

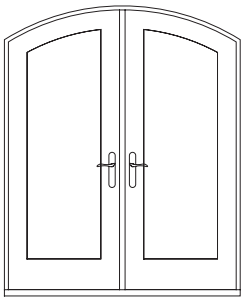

Shape 12
Full Arch Head

Size Tables

6' 7" Single Doors and Sidelight

	(476) (457)	(664) (645)	(781) (762)	(870) (851)	(933) (914)	(981) (962)
Opening	1' 6 3/4"	2' 2 1/8"	2' 6 3/4"	2' 10 1/4"	3' 0 3/4"	3' 2 5/8"
Frame	1' 6"	2' 1 3/8"	2' 6"	2' 9 1/2"	3' 0"	3' 1 7/8"
6' 7 1/2" (6' 8") (2 032) (2 019)		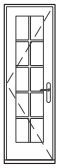	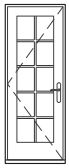	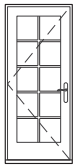	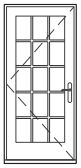	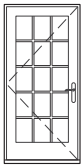
	SIDELIGHT 1880	LEFT 2680	LEFT 3080	LEFT 3480	LEFT 3680	LEFT 3880

6' 7" Double Doors Fixed-Active

	(1 289) (1 270)	(1 524) (1 505)	(1 702) (1 682)	(1 829) (1 810)	(1 924) (1 905)
Opening	4' 2 3/4"	5' 0"	5' 7"	6' 0"	6' 3 3/4"
Frame	4' 2"	4' 11 1/4"	5' 6 1/4"	5' 11 1/4"	6' 3"
6' 7 1/2" (6' 8") (2 032) (2 019)	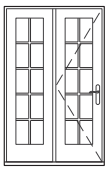	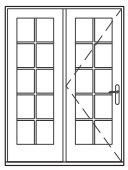	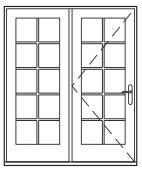	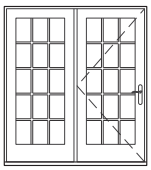	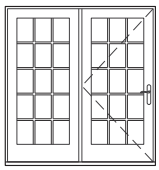
	FIXED-ACTIVE 5080	FIXED-ACTIVE 6080	FIXED-ACTIVE 6780	FIXED-ACTIVE 7280	FIXED-ACTIVE 7580

6' 7" Double Doors Active-Passive

	(1 289) (1 270)	(1 524) (1 505)	(1 702) (1 682)	(1 829) (1 810)	(1 924) (1 905)
Opening	4' 2 3/4"	5' 0"	5' 7"	6' 0"	6' 3 3/4"
Frame	4' 2"	4' 11 1/4"	5' 6 1/4"	5' 11 1/4"	6' 3"
6' 7 1/2" (6' 8") (2 032) (2 019)	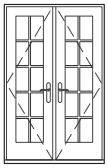	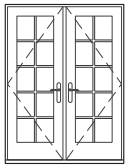	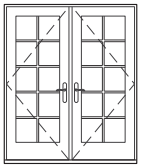	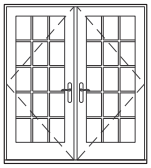	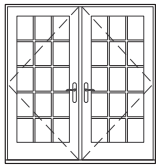
	ACTIVE-PASSIVE 5080	ACTIVE-PASSIVE 6080	ACTIVE-PASSIVE 6780	ACTIVE-PASSIVE 7280	ACTIVE-PASSIVE 7580

Not to scale.

Traditional grille patterns shown. Refer to Clad/Wood Overview section for additional patterns and profiles.

All doors and sidelights are glazed with tempered glass.

Left-hand single doors shown, right-hand and fixed also available.

For Wood Units Only:

To determine masonry dimensions when using Pella 1-7/8" brickmould, add 1-5/8" to frame height and 3-1/8" to frame width. When using Pella 3-1/2" brickmould, add 6-3/8" to frame width and 3-1/4" to frame height.

Size Tables

6' 10" Single Doors and Sidelight

	(476) (457)	(664) (645)	(781) (762)	(870) (851)	(933) (914)	(981) (962)
Opening	1' 6 3/4"	2' 2 1/8"	2' 6 3/4"	2' 10 1/4"	3' 0 3/4"	3' 2 5/8"
Frame	1' 6"	2' 1 3/8"	2' 6"	2' 9 1/2"	3' 0"	3' 1 7/8"
6' 10" (2 083) / 6' 9 1/2" (2 070)	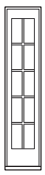		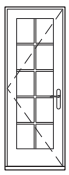	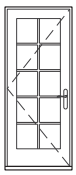	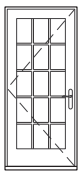	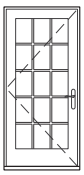
	SIDELIGHT 1882	LEFT 2682	LEFT 3082	LEFT 3482	LEFT 3682	LEFT 3882

6' 10" Double-Swing Doors Fixed-Active

	(1 289) (1 270)	(1 524) (1 505)	(1 702) (1 682)	(1 829) (1 810)	(1 924) (1 905)
Opening	4' 2 3/4"	5' 0"	5' 7"	6' 0"	6' 3 3/4"
Frame	4' 2"	4' 11 1/4"	5' 6 1/4"	5' 11 1/4"	6' 3"
6' 10" (2 083) / 6' 9 1/2" (2 070)	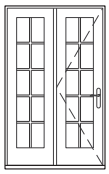	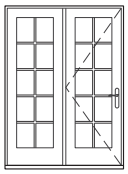	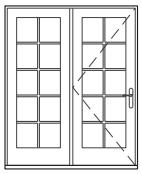	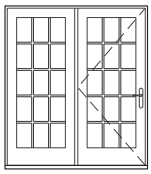	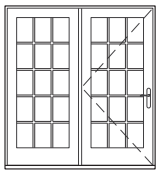
	FIXED-ACTIVE 5082	FIXED-ACTIVE 6082	FIXED-ACTIVE 6782	FIXED-ACTIVE 7282	FIXED-ACTIVE 7582

6' 10" Double Doors Active-Passive

	(1 289) (1 270)	(1 524) (1 505)	(1 702) (1 682)	(1 829) (1 810)	(1 924) (1 905)
Opening	4' 2 3/4"	5' 0"	5' 7"	6' 0"	6' 3 3/4"
Frame	4' 2"	4' 11 1/4"	5' 6 1/4"	5' 11 1/4"	6' 3"
6' 10" (2 083) / 6' 9 1/2" (2 070)	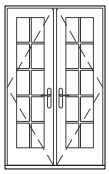	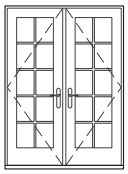	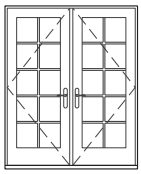	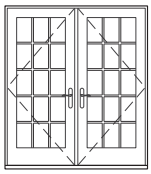	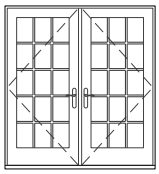
	ACTIVE-PASSIVE 5082	ACTIVE-PASSIVE 6082	ACTIVE-PASSIVE 6782	ACTIVE-PASSIVE 7282	ACTIVE-PASSIVE 7582

Not to scale.

Traditional grille patterns shown. Refer to Clad/Wood Overview section for additional patterns and profiles.

All doors and sidelights are glazed with tempered glass.

Left-hand single doors shown, right-hand and fixed also available.

For Wood Units Only:

To determine masonry dimensions when using Pella 1-7/8" brickmould, add 1-5/8" to frame height and 3-1/8" to frame width. When using Pella 3-1/2" brickmould, add 6-3/8" to frame width and 3-1/4" to frame height.

Size Tables

7' 2" Single Doors and Sidelight

	(476) (457)	(664) (645)	(781) (762)	(870) (851)	(933) (914)	(981) (962)
Opening	1' 6 3/4"	2' 2 1/8"	2' 6 3/4"	2' 10 1/4"	3' 0 3/4"	3' 2 5/8"
Frame	1' 6"	2' 1 3/8"	2' 6"	2' 9 1/2"	3' 0"	3' 1 7/8"
(2 197) (2 184) 7' 2 1/2" / 7' 2"	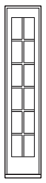	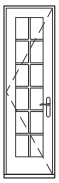	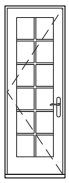	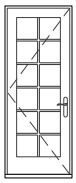	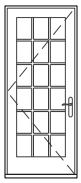	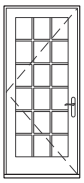
	SIDELIGHT 1886	LEFT 2686	LEFT 3086	LEFT 3486	LEFT 3686	LEFT 3886

7' 2" Double-Swing Doors Fixed-Active

	(1 289) (1 270)	(1 524) (1 505)	(1 702) (1 682)	(1 829) (1 810)	(1 924) (1 905)
Opening	4' 2 3/4"	5' 0"	5' 7"	6' 0"	6' 3 3/4"
Frame	4' 2"	4' 11 1/4"	5' 6 1/4"	5' 11 1/4"	6' 3"
(2 197) (2 184) 7' 2 1/2" / 7' 2"	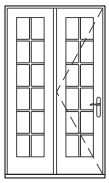	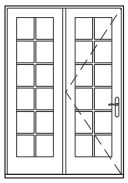	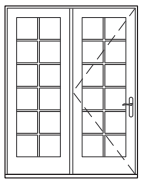	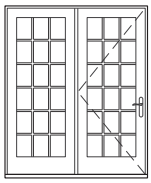	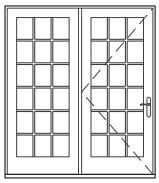
	FIXED-ACTIVE 5086	FIXED-ACTIVE 6086	FIXED-ACTIVE 6786	FIXED-ACTIVE 7286	FIXED-ACTIVE 7586

7' 2" Double Doors Active-Passive

	(1 289) (1 270)	(1 524) (1 505)	(1 702) (1 682)	(1 829) (1 810)	(1 924) (1 905)
Opening	4' 2 3/4"	5' 0"	5' 7"	6' 0"	6' 3 3/4"
Frame	4' 2"	4' 11 1/4"	5' 6 1/4"	5' 11 1/4"	6' 3"
(2 197) (2 184) 7' 2 1/2" / 7' 2"	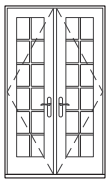	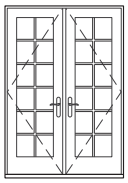	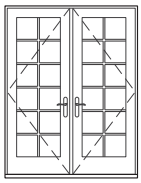	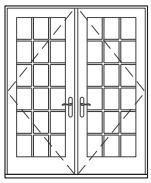	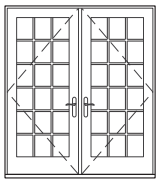
	ACTIVE-PASSIVE 5086	ACTIVE-PASSIVE 6086	ACTIVE-PASSIVE 6786	ACTIVE-PASSIVE 7286	ACTIVE-PASSIVE 7586

Not to scale.

Traditional grille patterns shown. Refer to Clad/Wood Overview section for additional patterns and profiles.

All doors and sidelights are glazed with tempered glass.

Left-hand single doors shown, right-hand and fixed also available.

For Wood Units Only:

To determine masonry dimensions when using Pella 1-7/8" brickmould, add 1-5/8" to frame height and 3-1/8" to frame width. When using Pella 3-1/2" brickmould, add 6-3/8" to frame width and 3-1/4" to frame height.

Size Tables

8' 0" Single Doors and Sidelight

	(476) (457)	(664) (645)	(781) (762)	(870) (851)	(933) (914)	(981) (962)
Opening	1' 6 3/4"	2' 2 1/8"	2' 6 3/4"	2' 10 1/4"	3' 0 3/4"	3' 2 5/8"
Frame	1' 6"	2' 1 3/8"	2' 6"	2' 9 1/2"	3' 0"	3' 1 7/8"
8' 0" (2 438) / 7' 11 1/2" (2 426)			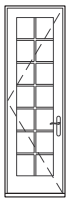	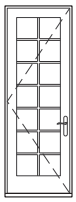	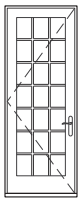	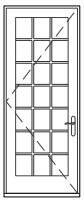
	SIDELIGHT 1896	LEFT 2696	LEFT 3096	LEFT 3496	LEFT 3696	LEFT 3896

8' 0" Double-Swing Doors Fixed-Active

	(1 289) (1 270)	(1 524) (1 505)	(1 702) (1 682)	(1 829) (1 810)	(1 924) (1 905)
Opening	4' 2 3/4"	5' 0"	5' 7"	6' 0"	6' 3 3/4"
Frame	4' 2"	4' 11 1/4"	5' 6 1/4"	5' 11 1/4"	6' 3"
8' 0" (2 438) / 7' 11 1/2" (2 426)	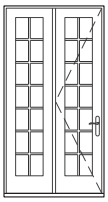	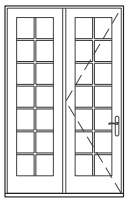	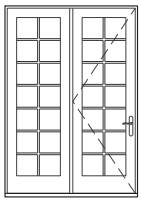	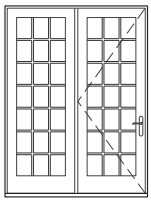	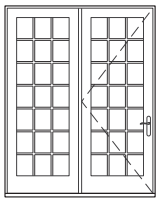
	FIXED-ACTIVE 5096	FIXED-ACTIVE 6096	FIXED-ACTIVE 6796	FIXED-ACTIVE 7296	FIXED-ACTIVE 7596

8' 0" Double Doors Active-Passive

	(1 289) (1 270)	(1 524) (1 505)	(1 702) (1 682)	(1 829) (1 810)	(1 924) (1 905)
Opening	4' 2 3/4"	5' 0"	5' 7"	6' 0"	6' 3 3/4"
Frame	4' 2"	4' 11 1/4"	5' 6 1/4"	5' 11 1/4"	6' 3"
8' 0" (2 438) / 7' 11 1/2" (2 426)	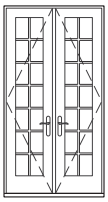	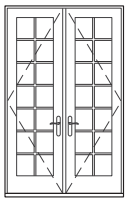	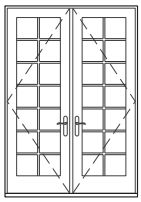	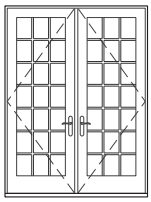	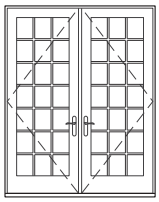
	ACTIVE-PASSIVE 5096	ACTIVE-PASSIVE 6096	ACTIVE-PASSIVE 6796	ACTIVE-PASSIVE 7296	ACTIVE-PASSIVE 7596

Not to scale.

Traditional grille patterns shown. Refer to Clad/Wood Overview section for additional patterns and profiles.

All doors and sidelights are glazed with tempered glass.

Left-hand single doors shown, right-hand and fixed also available.

For Wood Units Only:

To determine masonry dimensions when using Pella 1-7/8" brickmould, add 1-5/8" to frame height and 3-1/8" to frame width. When using Pella 3-1/2" brickmould, add 6-3/8" to frame width and 3-1/4" to frame height.

Size Tables

10' 0" Single Doors and Sidelight

	(664) (645)	(781) (762)	(870) (851)	(933) (914)	(981) (962)
Opening	2' 2 1/8"	2' 6 3/4"	2' 10 1/4"	3' 0 3/4"	3' 2 5/8"
Frame	2' 1 3/8"	2' 6"	2' 9 1/2"	3' 0"	3' 1 7/8"
10' 0" (3 048) 9' 11 1/2" (3 035)	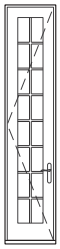	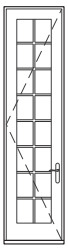	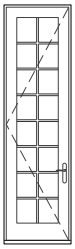	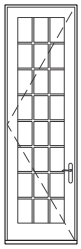	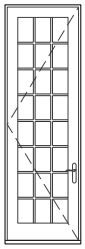
	LEFT 26120	LEFT 30120	LEFT 34120	LEFT 36120	LEFT 38120

10' 0" Double Doors Active-Passive

	(1 289) (1 270)	(1 524) (1 505)	(1 702) (1 682)	(1 829) (1 810)	(1 924) (1 905)
Opening	4' 2 3/4"	5' 0"	5' 7"	6' 0"	6' 3 3/4"
Frame	4' 2"	4' 11 1/4"	5' 6 1/4"	5' 11 1/4"	6' 3"
10' 0" (3 048) 9' 11 1/2" (3 035)	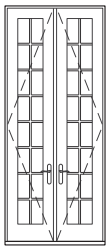	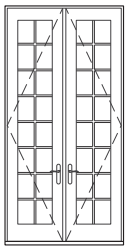	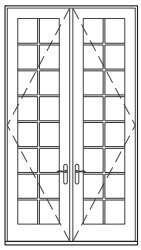	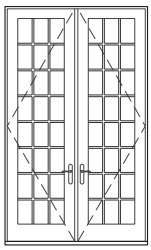	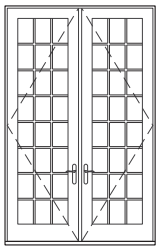
	ACTIVE-PASSIVE 50120	ACTIVE-PASSIVE 60120	ACTIVE-PASSIVE 67120	ACTIVE-PASSIVE 72120	ACTIVE-PASSIVE 75120

Not to scale.

Traditional grille patterns shown. Refer to Clad/Wood Overview section for additional patterns and profiles.

All doors and sidelights are glazed with tempered glass.

Left-hand single doors shown, right-hand and fixed also available.

For Wood Units Only:

To determine masonry dimensions when using Pella 1-7/8" brickmould, add 1-5/8" to frame height and 3-1/8" to frame width. When using Pella 3-1/2" brickmould, add 6-3/8" to frame width and 3-1/4" to frame height.

Pella® Reserve™ Traditional In-Swing Patio Door

Size Tables

Wide Stile Transoms for Single Doors

		(664) (645)	(781) (762)	(870) (851)	(933) (914)	(981) (962)
	Opening	2' 2 1/8"	2' 6 3/4"	2' 10 1/4"	3' 0 3/4"	3' 2 5/8"
	Frame	2' 1 3/8"	2' 6"	2' 9 1/2"	3' 0"	3' 1 7/8"
(375) (356) 1' 2 3/4"	1' 2"	2614	3014	3414	3614	3814
(451) (432) 1' 5 3/4"	1' 5"	2617	3017	3417	3617	3817
(654) (635) 2' 1 3/4"	2' 1"	2625	3025	3425	3625	3825

Wide Stile Transoms for Double-Swing Doors

(1 289) (1 270)	(1 524) (1 505)	(1 702) (1 682)	(1 829) (1 810)
4' 2 3/4"	5' 0"	5' 7"	6' 0"
4' 2"	4' 11 1/4"	5' 6 1/4"	5' 11 1/4"
5014	6014 T	6714 T	7214 T
5017	6017	6717	7217 T
5025	6025	6725	7225

Standard Stile Transoms for Single Doors

(375) (356) 1' 2 3/4"	1' 2"	2614	3014	3414	3614	3814
(451) (432) 1' 5 3/4"	1' 5"	2617	3017	3417	3617	3817
(654) (635) 2' 1 3/4"	2' 1"	2625	3025	3425	3625	3825

Standard Stile Transoms for Double Doors

(375) (356) 1' 2 3/4"	1' 2"	5014	6014 T	6714 T	7214 T
(451) (432) 1' 5 3/4"	1' 5"	5017	6017	6717 T	7217 T
(654) (635) 2' 1 3/4"	2' 1"	5025	6025	6725	7225

Fixed Frame Direct Sets for Single Doors GBG Only

(375) (356) 1' 2 3/4"	1' 2"	2614	3014	3414	3614	3814
(451) (432) 1' 5 3/4"	1' 5"	2617	3017	3417	3617	3817
(654) (635) 2' 1 3/4"	2' 1"	2625	3025	3425	3625	3825

Fixed Frame Direct Sets for Double Doors GBG Only

(375) (356) 1' 2 3/4"	1' 2"	5014	6014	6714	7214 T
(451) (432) 1' 5 3/4"	1' 5"	5017	6017	6717	7217
(654) (635) 2' 1 3/4"	2' 1"	5025	6025	6725	7225

Not to scale.

T Tempered glass is standard.

Traditional grille patterns shown. Refer to Clad/Wood Overview section for additional patterns and profiles.

For Wood Units Only:
To determine masonry dimensions when using Pella 1-7/8" brickmould, add 1-5/8" to frame height and 3-1/8" to frame width. When using Pella 3-1/2" brickmould, add 6-3/8" to frame width and 3-1/4" to frame height.

Special Size Frame Dimensions [1]

Door Type	Standard Doors				Products with Impact-Resistant Glass [2]			
	Frame Width		Frame Height		Frame Width		Frame Height	
	Minimum	Maximum	Minimum	Maximum	Minimum	Maximum	Minimum	Maximum
Transoms	25-3/8" (645)	75" (1 905)	14" (356)	25" (635)	25-3/8" (645)	75" (1 905)	14" (356)	25" (635)
Sidelight (Fixed)	18" (457)	65" (457)	36" (914)	119-1/2" (3 035)	12" (305)	42" (1 067)	48" (1 219)	96" (2 438)
Single Doors	18" (457)	48" (1 219)	36" (914)	119-1/2" (3 035)	24" (610)	37-7/8" (962)	76-3/8" (1 940)	119-1/2" (3 035)
Double Doors (AP-PA)	36" (914)	96" (2 438)	36" (914)	119-1/2" (3 035)	48" (1 219)	75" (1 905)	73-3/8" (1 864)	119-1/2" (3 035)
Double Doors (AF-FA)	50" (1 270)	75" (1 905)	79-1/2" (2 019)	119-1/2" (3 035)	48" (1 219)	75" (1 905)	73-3/8" (1 864)	119-1/2" (3 035)

Hinged Door Screen Availability [2]

Door Type	Frame Width		Frame Height	
	Minimum	Maximum	Minimum	Maximum
Single Door	24" (610)	42" (1 067)	71-1/4" (1 810)	98-1/8" (2 492)
Double Door	48" (1 219)	84" (2 134)	71-1/4" (1 810)	98-1/8" (2 492)

Miscellaneous Formulas

	Visible Glass		Actual Glass	
	Width	Height	Width	Height
Transoms — Fixed Frame Direct Set	FW - 3-1/4"	FH - 3-1/4"	FW - 2"	FH - 2"
Transoms — Fixed Casement	FW - 5-3/4"	FH - 5-3/4"	FW - 4-3/8"	FH - 4-3/8"
Transoms — Wide Stile Casement	FW - 11-5/8"		FW - 10-1/4"	
Sidelights	FW - 6-5/8"	FH - 15-3/4"	FW - 5-5/8"	FH - 4-3/8"
Single Doors	FW - 11-5/8"		FW - 10-5/8"	
Double Doors	FW - 11-5/8"		(FW ÷ 2) - 10-1/4"	

	Clad and Wood	Width	Height
Clear Opening (@ 90°)	Single Door	FW - 5-5/16"	FH - 3-1/16"
	Double Doors (Active/Single Panel)	(FW ÷ 2) - 5"	
	Double Doors (Both Panels)	FW - 7-1/2"	
Clear Opening (@ 172°)	Single Door	FW - 3-3/16"	FH - 3-1/16"
	Double Doors (Active/Single Panel)	(FW ÷ 2) - 2-13/16"	
	Double Doors (Both Panels)	FW - 3"	

Clear Opening Schematic

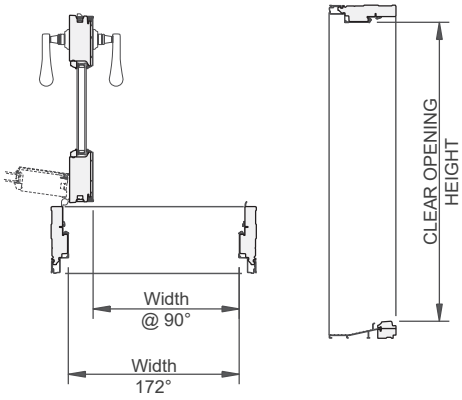

CLEAR OPENING WIDTH

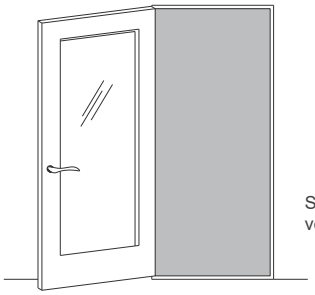

Shaded portion shows vent area of door.

FW = Frame Width, FH = Frame Height
(1) Available within size range shown.
(2) Rectangular Units Only

Keep frame dimensions to the nearest 1/8" increment.
To convert areas to square meters (m^2), multiply square feet by 0.0929.

In-Swing French Design Data

	Unit	Single and Double Doors	Clear Opening (Inches) 1				Vent Area (Standard Sill)	Vent Area (ADA Sill)	Visible Glass Ft²	Standard Glass Thickness (mm) Tempered		Performance Class & Grade 2
			Width (Inches) (172°)	Width (Inches) (90°)	Standard Sill Unit Height	ADA Sill Unit Height				Dual-Pane Glazing	Triple-Pane Glazing	
6' 7-1/2" DOORS	2680	F	—	—	—	—	—	—	6.1	3	3	LC55
	3080	F	—	—	—	—	—	—	8.1	3	3	LC55
	3480	F	—	—	—	—	—	—	9.7	3	3	LC55
	3680	F	—	—	—	—	—	—	10.8	3	3	LC55
	3880	F	—	—	—	—	—	—	11.6	3	3	LC55
	2680	L / R	22-5/16	20-1/16	76-7/16	77-1/2	11.8	12.0	6.1	3	3	LC55
	3080	L / R	26-15/16	24-11/16	76-7/16	77-1/2	14.3	14.5	8.1	3	3	LC55
	3480	L / R	30-7/16	28-3/16	76-7/16	77-1/2	16.2	16.4	9.7	3	3	LC55
	3680	L / R	32-15/16	30-11/16	76-7/16	77-1/2	17.5	17.7	10.8	3	3	LC55
	3880	L / R	34-13/16	32-9/16	76-7/16	77-1/2	18.5	18.7	11.6	3	3	LC55
	5080	FA/AF	22-5/16	20-1/16	76-7/16	77-1/2	11.8	12.0	12.2	3	3	LC55
	6080	FA/AF	26-15/16	24-11/16	76-7/16	77-1/2	14.3	14.5	16.3	3	3	LC55
	6780	FA/AF	30-7/16	28-3/16	76-7/16	77-1/2	16.2	16.4	19.4	3	3	LC55
	7280	FA/AF	32-15/16	30-11/16	76-7/16	77-1/2	17.5	17.7	21.6	3	3	LC55
	7580	FA/AF	34-13/16	32-9/16	76-7/16	77-1/2	18.5	18.7	23.2	3	3	LC55
	5080	PA / AP	47/ 22-1/4	42-1/2/ 20	76-7/16	77-1/2	25.0	25.3	12.2	3	3	LC55
	6080	PA / AP	56-1/4/ 26-7/8	51-3/4 / 24-5/8	76-7/16	77-1/2	29.9	30.3	16.3	3	3	LC55
	6780	PA / AP	63-1/4/ 30-7/8	58-3/4/ 28-5/8	76-7/16	77-1/2	33.6	34.0	19.4	3	3	LC55
	7280	PA / AP	68-1/4/ 32-7/8	63-3/4 / 30-5/8	76-7/16	77-1/2	36.2	36.7	21.6	3	3	LC55
	7580	PA / AP	72 / 34-3/4	67-1/2 / 32-1/2	76-7/16	77-1/2	38.2	38.8	23.2	3	3	LC55

(—) = Not Applicable
(1) All dimensions are approximate to the nearest 1/16". The second value, where shown, provides the clear opening for the active panel only.
(2) Maximum performance when glazed with the appropriate glass thickness. All doors and sidelights are Tempered glass.
To convert areas to square meters (m^2), multiply square feet by 0.0929.

In-Swing French Design Data

	Unit	Single and Double Doors	Clear Opening (Inches) 1				Vent Area (Standard Sill)	Vent Area (ADA Sill)	Visible Glass Ft²	Standard Glass Thickness (mm) Tempered		Performance Class & Grade 2
			Width (Inches) (172°)	Width (Inches) (90°)	Standard Sill Unit Height	ADA Sill Unit Height				Dual-Pane Glazing	Triple-Pane Glazing	
6' 10" DOORS	2682	F	—	—	—	—	—	—	6.3	3	3	LC55
	3082	F	—	—	—	—	—	—	8.4	3	3	LC55
	3482	F	—	—	—	—	—	—	9.8	3	3	LC55
	3682	F	—	—	—	—	—	—	11.1	3	3	LC55
	3882	F	—	—	—	—	—	—	12.0	3	3	LC55
	2682	L / R	22-5/16	20-1/16	78-7/16	79-1/2	12.2	12.3	6.3	3	3	LC55
	3082	L / R	26-15/16	24-11/16	78-7/16	79-1/2	14.7	14.9	8.4	3	3	LC55
	3482	L / R	30-7/16	28-3/16	78-7/16	79-1/2	16.6	16.8	9.8	3	3	LC55
	3682	L / R	32-15/16	30-11/16	78-7/16	79-1/2	17.9	18.2	11.1	3	3	LC55
	3882	L / R	34-13/16	32-9/16	78-7/16	79-1/2	19.0	19.2	12.0	3	3	LC55
	5082	FA / AF	22-5/16	20-1/16	78-7/16	79-1/2	12.2	12.3	12.6	3	3	LC55
	6082	FA / AF	26-15/16	24-11/16	78-7/16	79-1/2	14.7	14.9	16.8	3	3	LC55
	6782	FA / AF	30-7/16	28-3/16	78-7/16	79-1/2	16.6	16.8	19.6	3	3	LC55
	7282	FA / AF	32-15/16	30-11/16	78-7/16	79-1/2	17.9	18.2	22.3	3	3	LC55
	7582	FA / AF	34-13/16	32-9/16	78-7/16	79-1/2	19.0	19.2	24.0	3	3	LC55
	5082	PA / AP	47/ 22-1/4	42-1/2/ 20	78-7/16	79-1/2	25.6	26.0	12.6	3	3	LC55
	6082	PA / AP	56-1/4/ 26-7/8	51-3/4 / 24-5/8	78-7/16	79-1/2	30.6	31.1	16.8	3	3	LC55
	6782	PA / AP	63-1/4/ 30-7/8	58-3/4/ 28-5/8	78-7/16	79-1/2	34.5	34.9	19.6	3	3	LC55
	7282	PA / AP	68-1/4/ 32-7/8	63-3/4 / 30-5/8	78-7/16	79-1/2	37.2	37.7	22.3	3	3	LC55
	7582	PA / AP	72 / 34-3/4	67-1/2 / 32-1/2	78-7/16	79-1/2	39.2	39.8	24.0	3	3	LC55
7' 2" DOORS	2686	F	—	—	—	—	—	—	6.7	3	3	LC55
	3086	F	—	—	—	—	—	—	9.0	3	3	LC55
	3486	F	—	—	—	—	—	—	10.7	3	3	LC55
	3686	F	—	—	—	—	—	—	11.9	3	3	LC55
	3886	F	—	—	—	—	—	—	12.8	3	3	LC55
	2686	L / R	22-5/16	20-1/16	82-15/16	84	12.9	13.0	6.7	3	3	LC55
	3086	L / R	26-15/16	24-11/16	82-15/16	84	15.5	15.7	9.0	3	3	LC55
	3486	L / R	30-7/16	28-3/16	82-15/16	84	17.5	17.8	10.7	3	3	LC55
	3686	L / R	32-15/16	30-11/16	82-15/16	84	19.0	19.2	11.9	3	3	LC55
	3886	L / R	34-13/16	32-9/16	82-15/16	84	20.1	20.3	12.8	3	3	LC55
	5086	FA / AF	22-5/16	20-1/16	82-15/16	84	12.9	13.0	13.4	3	3	LC55
	6086	FA / AF	26-15/16	24-11/16	82-15/16	84	15.5	15.7	17.9	3	3	LC55
	6786	FA / AF	30-7/16	28-3/16	82-15/16	84	17.5	17.8	21.3	3	3	LC55
	7286	FA / AF	32-15/16	30-11/16	82-15/16	84	19.0	19.2	23.8	3	3	LC55
	7586	FA / AF	34-13/16	32-9/16	82-15/16	84	20.1	20.3	25.6	3	3	LC55
	5086	PA / AP	47/ 22-1/4	42-1/2/ 20	82-15/16	84	27.1	27.4	13.4	3	3	LC55
	6086	PA / AP	56-1/4/ 26-7/8	51-3/4 / 24-5/8	82-15/16	84	32.4	32.8	17.9	3	3	LC55
	6786	PA / AP	63-1/4/ 30-7/8	58-3/4/ 28-5/8	82-15/16	84	36.4	36.9	21.3	3	3	LC55
	7286	PA / AP	68-1/4/ 32-7/8	63-3/4 / 30-5/8	82-15/16	84	39.3	39.8	23.8	3	3	LC55
	7586	PA / AP	72 / 34-3/4	67-1/2 / 32-1/2	82-15/16	84	41.5	42.0	25.6	3		LC55

(—) = Not Applicable

(1) All dimensions are approximate to the nearest 1/16". The second value, where shown, provides the clear opening for the active panel only.

(2) Maximum performance when glazed with the appropriate glass thickness. All doors and sidelights are Tempered glass.

To convert areas to square meters (m^2), multiply square feet by 0.0929.

Design Data

In-Swing French Design Data

	Unit	Single and Double Doors	Clear Opening (Inches) 1				Vent Area (Standard Sill)	Vent Area (ADA Sill)	Visible Glass Ft²	Standard Glass Thickness (mm) Tempered		Performance Class & Grade 2
			Width (Inches) (172°)	Width (Inches) (90°)	Standard Sill Unit Height	ADA Sill Unit Height				Dual-Pane Glazing	Triple-Pane Glazing	
8' 0" DOORS	2696	F	—	—	—	—	—	—	7.6	3	3	LC55
	3096	F	—	—	—	—	—	—	10.2	3	3	LC55
	3496	F	—	—	—	—	—	—	12.1	3	3	LC55
	3696	F	—	—	—	—	—	—	13.5	3	3	LC55
	3896	F	—	—	—	—	—	—	14.5	3	3	LC55
	2696	L / R	22-5/16	20-1/16	92-7/16	93-1/2	14.3	14.5	7.6	3	3	LC55
	3096	L / R	26-15/16	24-11/16	92-7/16	93-1/2	17.3	17.5	10.2	3	3	LC55
	3496	L / R	30-7/16	28-3/16	92-7/16	93-1/2	19.5	19.8	12.1	3	3	LC55
	3696	L / R	32-15/16	30-11/16	92-7/16	93-1/2	21.1	21.4	13.5	3	3	LC55
	3896	L / R	34-13/16	32-9/16	92-7/16	93-1/2	22.4	22.6	14.5	3	3	LC55
	5096	FA / AF	22-5/16	20-1/16	92-7/16	93-1/2	14.3	14.5	15.2	3	3	LC55
	6096	FA / AF	26-15/16	24-11/16	92-7/16	93-1/2	17.3	17.5	20.4	3	3	LC55
	6796	FA / AF	30-7/16	28-3/16	92-7/16	93-1/2	19.5	19.8	24.2	3	3	LC55
	7296	FA / AF	32-15/16	30-11/16	92-7/16	93-1/2	21.1	21.4	27.0	3	3	LC55
	7596	FA / AF	34-13/16	32-9/16	92-7/16	93-1/2	22.4	22.6	29.1	3	3	LC55
	5096	PA / AP	47/ 22-1/4	42-1/2/ 20	92-7/16	93-1/2	30.2	30.5	15.2	3	3	LC55
	6096	PA / AP	56-1/4/ 26-7/8	51-3/4 / 24-5/8	92-7/16	93-1/2	36.1	36.5	20.4	3	3	LC55
	6796	PA / AP	63-1/4/ 30-7/8	58-3/4/ 28-5/8	92-7/16	93-1/2	40.6	41.1	24.2	3	3	LC55
	7296	PA / AP	68-1/4/ 32-7/8	63-3/4 / 30-5/8	92-7/16	93-1/2	43.8	44.3	27.0	3	3	LC55
	7596	PA / AP	72 / 34-3/4	67-1/2 / 32-1/2	92-7/16	93-1/2	46.2	46.8	29.1	3	3	LC55
10' 0" DOORS	26120	F	—	—	—	—	—	—	9.9	5	—	LC55
	30120	F	—	—	—	—	—	—	13.2	5	—	LC55
	34120	F	—	—	—	—	—	—	15.8	5	—	LC55
	36120	F	—	—	—	—	—	—	17.6	5	—	LC55
	38120	F	—	—	—	—	—	—	18.9	5	—	LC55
	26120	L/R	22-5/16	20-1/16	116-7/16	117-1/2	18.0	18.2	9.9	5	—	LC40
	30120	L/R	26-15/16	24-11/16	116-7/16	117-1/2	21.8	22.0	13.2	5	—	LC40
	34120	L/R	30-7/16	28-3/16	116-7/16	117-1/2	24.6	24.8	15.8	5	—	LC40
	36120	L/R	32-15/16	30-11/16	116-7/16	117-1/2	26.6	26.9	17.6	5	—	LC40
	38120	L/R	34-13/16	32-9/16	116-7/16	117-1/2	28.2	28.4	18.9	5	—	LC40
	50120	PA/AP	47/ 22-1/4	42-1/2/ 20	116-7/16	117-1/2	38.0	38.4	19.8	5	—	LC40
	60120	PA/AP	56-1/4/ 26-7/8	51-3/4 / 24-5/8	116-7/16	117-1/2	45.5	45.9	26.5	5	—	LC40
	67120	PA/AP	63-1/4/ 30-7/8	58-3/4/ 28-5/8	116-7/16	117-1/2	51.1	51.6	31.5	5	—	LC40
	72120	PA/AP	68-1/4/ 32-7/8	63-3/4 / 30-5/8	116-7/16	117-1/2	55.2	55.7	35.1	5	—	LC40
	75120	PA/AP	72 / 34-3/4	67-1/2 / 32-1/2	116-7/16	117-1/2	58.2	58.8	37.8	5	—	LC40

Sidelights

Unit	Visible Glass Ft²	Standard Glass Thickness (mm) Tempered		Performance Class & Grade
		Dual-Pane Glazing	Triple-Pane Glazing	
1880	5	3	3	LC55
1881	5.1	3	3	LC55
1882	5.2	3	3	LC55
1886	5.5	3	3	LC55
1896	6.3	3	3	LC55

(—) = Not Applicable

(1) All dimensions are approximate to the nearest 1/16". The second value, where shown, provides the clear opening for the active panel only.

(2) Maximum performance when glazed with the appropriate glass thickness. All doors and sidelights are Tempered glass.

To convert areas to square meters (m^2), multiply square feet by 0.0929.

Transoms

	Unit	Visible Glass Ft²	Standard Glass Thickness (mm)			Performance Class & Grade[2]
			Dual-Pane Glazing		Triple-Pane Glazing	
			Annealed	Tempered	Annealed or Tempered	
TRANSOMS — FIXED FRAME DIRECT SET	2614	1.7	3	3	3	CW50
	2617	2.1	3	3	3	CW50
	2625	3.3	3	3	3	CW50
	3014	2.0	3	3	3	CW50
	3017	2.6	3	3	3	CW50
	3025	4.0	3	3	3	CW50
	3414	2.3	3	3	3	CW50
	3417	2.9	3	3	3	CW50
	3425	4.6	3	3	3	CW50
	3614	2.4	3	3	3	CW50
	3617	3.1	3	3	3	CW50
	3625	4.9	3	3	3	CW50
	3814	2.6	3	3	3	CW50
	3817	3.3	3	3	3	CW50
	3825	5.2	3	3	3	CW50
	5014	3.5	3	3	3	CW50
	5017	4.5	3	3	3	CW50
	5025	7.1	3	3	3	CW50
	6014	4.2	3	3	3	CW50
	6017	5.3	3	3	3	CW50
	6025	8.5	3	3	3	CW50
	6714	4.7	3	3	3	CW40
	6717	6.0	3	3	3	CW40
	6725	9.5	3	3	3	CW40
	7214T	5.1	—	3	3	CW40
	7217	6.5	3	3	3	CW40
	7225	10.3	3	3	3	CW40
	7514T	5.4	—	3	3	CW40
	7517T	6.8	—	3	3	CW40
	7525	10.8	3	3	3	CW40
TRANSOMS — STANDARD STILE	2614	1.1	2.5	3	3	CW50
	2617	1.5	2.5	3	3	CW50
	2625	2.6	2.5	3	3	CW50
	3014	1.4	2.5	3	3	CW50
	3017	1.9	2.5	3	3	CW50
	3025	3.2	2.5	3	3	CW50
	3414	1.6	2.5	3	3	CW50
	3417	2.2	2.5	3	3	CW50
	3425	3.7	2.5	3	3	CW50
	3614	1.7	2.5	3	3	CW50
	3617	2.4	2.5	3	3	CW50
	3625	4.0	2.5	3	3	CW50
	3814	1.8	2.5	3	3	CW50
	3817	2.5	2.5	3	3	CW50
	3825	4.3	2.5	3	3	CW50
	5014	2.5	2.5	3	3	CW50
	5017	3.5	2.5	3	3	CW50
	5025	5.9	2.5	3	3	CW50
	6014T	3.1	—	3	3	CW50
	6017	4.2	2.5	3	3	CW50
	6025	7.2	2.5	3	3	CW45/CW50
	6714T	3.5	—	3	3	R15[1]
	6717	4.7	2.5	3	3	R15[1]
	6725	8.1	2.5	3	3	R15[1]
	7214T	3.8	—	3	3	R15[1]
	7217T	5.1	—	3	3	R15[1]
	7225	8.8	2.5	3	3	R15[1]
	7514T	4.0	—	3	3	R15[1]
	7517T	5.4	—	3	3	R15[1]
	7525	9.3	2.5	3	3	R15[1]

Transoms

	Unit	Visible Glass Ft²	Standard Glass Thickness (mm)			Performance Class & Grade[2]
			Dual-Pane Glazing		Triple-Pane Glazing	
			Annealed	Tempered	Annealed or Tempered	
TRANSOMS — WIDE STILE	2614	0.8	2.5	3	3	R15[1]
	2617	1.1	2.5	3	3	R15[1]
	2625	1.8	2.5	3	3	R15[1]
	3014	1.1	2.5	3	3	R15[1]
	3017	1.4	2.5	3	3	R15[1]
	3025	2.5	2.5	3	3	R15[1]
	3414	1.3	2.5	3	3	R15[1]
	3417	1.7	2.5	3	3	R15[1]
	3425	2.9	2.5	3	3	R15[1]
	3614	1.4	2.5	3	3	R15[1]
	3617	1.9	2.5	3	3	R15[1]
	3625	3.3	2.5	3	3	R15[1]
	3814	1.5	2.5	3	3	R15[1]
	3817	2.1	2.5	3	3	R15[1]
	3825	3.5	2.5	3	3	R15[1]
	5014	2.2	2.5	3	3	R15[1]
	5017	3.0	2.5	3	3	R15[1]
	5025	5.1	2.5	3	3	R15[1]
	6014T	2.7	—	3	3	R15[1]
	6017	3.7	2.5	3	3	R15[1]
	6025	6.4	2.5	3	3	R15[1]
	6714T	3.1	—	3	3	R15[1]
	6717T	4.3	—	3	3	R15[1]
	6725	7.3	2.5	3	3	R15[1]
	7214T	3.4	—	3	3	R15[1]
	7217T	4.7	—	3	3	R15[1]
	7225	8.0	2.5	3	3	R15[1]
	7514T	3.6	—	3	3	R15[1]
	7517T	5.0	—	3	3	R15[1]
	7525	8.5	2.5	3	3	R15[1]

(—) = Not Applicable

T = Tempered required due to aspect ratio.

(1) Units are not AAMA/WDMA performance certified. Units are engineered to meet the performance class and grade shown.

(2) Maximum performance when glazed with the appropriate glass thickness.

Pella® Reserve™ Traditional In-Swing Patio Door

Detailed Product Descriptions - Aluminum-Clad Exterior

Frame

- Select softwood, immersion treated with Pella's EnduraGuard® wood protection formula in accordance with WDMA I.S.-4. The EnduraGuard formula includes three active ingredients for protection against the effects of moisture, decay, stains from mold and mildew. Plus, an additional ingredient adds protection against termite damage.
- Interior exposed surfaces are [clear pine] [mahogany] [douglas fir], edge-banded and veneered. Any curved member may have visible finger-jointed surfaces.
- Exterior surfaces are clad with aluminum at the head and jambs.
- Components are assembled with screws, staples and concealed corner locks.
- Frame depth between 5-7/8" (149mm) to 8-5/8" (219mm), for wall depth between 4-9/16" (116mm) to 7-5/16" (186mm).
- Optional factory-applied EnduraClad® exterior trim.
- Solid extruded aluminum sill with [Mill] [Nickel] [Bronze] [Black] [anodized to match anodized cladding] finish. [Mahogany threshold for mahogany door] [[oak] [composite black] threshold for [pine] [douglas fir] door].

– or –

- Sill is 1/2" low profile. Material and finish are extruded aluminum with [mill] [Bronze] [anodized to match anodized cladding] finish.

Door panels

- Select softwood, immersion treated with Pella's EnduraGuard® wood protection formula in accordance with WDMA I.S.-4. The EnduraGuard formula includes three active ingredients for protection against the effects of moisture, decay, stains from mold and mildew. Plus, an additional ingredient adds protection against termite damage.
- Interior exposed surfaces are veneered with [clear pine] [mahogany] [douglas fir]. Any curved member may have visible finger-jointed surfaces.
- Exterior surfaces are clad with extruded aluminum.
- Panel hinge stiles and rails are three-ply construction, randomly finger-jointed blocks laminated with water-resistant glue and veneered on both sides.
- Panel lock stiles are constructed with LVL core with finger-jointed edge bands on both sides and veneered on both faces.
- Corners are urethane-silicone hybrid-sealed and secured with metal fasteners.
- Panel thickness is 2-1/16" (52mm).
- Panel exterior profile is [ogee] [putty glaze], interior profile is ogee.

Weatherstripping

- Dual-durometer extruded polymer along perimeter of door frame. On bottom panels, dual-durometer extruded polymer interior air seal and rigid polymer exterior facing bristle-strip.

Glazing System

- Quality fully-tempered float glass complying with ASTM C 1048.
- Custom and high altitude glazing available.
- Silicone-glazed, 13/16" double-pane, dual-seal, insulating glass
  - [Clear] [Obscure] [Reflective Bronze] with air.
  - [Obscure Low-E [with argon]] [[Advanced] [AdvancedComfort] [SunDefense™] [SunDefense+] [NaturalSun] [NaturalSun+] Low-E [with argon]].
  - [Bronze] [Gray] [Green] Advanced Low-E [with argon].

- or –

- Silicone-glazed, 13/16" double-pane, dual-seal, laminated, insulating glass
  - Clear with air.
  - [Advanced] [SunDefense™] Low-E with argon.
  - [Bronze] [Gray] [Green] Advanced Low-E with argon.

– or –

- Silicone-glazed, 1" triple-pane, dual-seal, insulating glass
  - [Obscure Low-E [with argon]] [[Advanced] [SunDefense™] [NaturalSun] Low-E [with argon]].

– or –

- Silicone-glazed, 7/8" double-pane, dual-seal, impact-resistant, laminated, insulating glass
  - Clear with air.
  - [Bronze] [Gray] [Green] with air.
  - [Advanced Low-E] [SunDefense™ Low-E] with argon.

Exterior

- Aluminum-clad exteriors shall be finished with EnduraClad® protective finish, in a multi-step, baked-on finish.
  - Color is [Standard] [feature] [custom][1].

– or –

- Aluminum-clad exteriors shall be finished with EnduraClad Plus protective finish with 70% fluoropolymer resin in a multi-step, baked-on finish.
  - Color is [Standard] [feature] [custom][1].

Interior

- [Unfinished, ready for site finishing] [factory primed with one coat acrylic latex] [factory prefinished [paint] [stain][1]].

Hardware

Hinges

- Hinges are adjustable to help with installation.
- Doors under 7' 0" frame height will have three (3) hinges per panel.
- Doors over 7' 0" frame height up to and including 8' 0" frame height will have four (4) hinges per panel.
- Doors over 8' 3" frame height up to and including 9' 0" frame height will have five (5) hinges per panel.
- Doors over 9' 0" frame height will have six (6) hinges per panel.

Locks

- Mortised and keyed multi-point locking system, center deadbolt and shoot-bolts at head and sill will engage simultaneously.
- Doors 8' 0" frame height and below will have one (1) strike at the head, one (1) strike at the sill and one (1) center deadbolt.
- Doors over 8' 0" frame height up to and including 10' 0" frame height will have one (1) strike at the head, one (1) strike at the sill and three (3) locking points at the stile.
- Solid brass handles and keylock with K-keyway cylinder.
- Key cylinder finish is [Brass] [Stainless Steel] [Matte Black].

Finish

- Hardware finish is (Handle, Hinges and Strike) [baked enamel [White] [Champagne] [Brown] [Matte Black]] [PVD High Performance finish [Satin Brass] [Satin Nickel]] [Oil-Rubbed Bronze] [Distressed Bronze] [Distressed Nickel] [Polished Nickel] [Polished Chrome].

Optional Products

Grilles

- Integral Light Technology® grilles
  - Interior grilles are [5/8"] [7/8"] [1-1/4"] [2"] ogee profile that are solid [Pine] [mahogany] [douglas fir]. Interior surfaces are [unfinished, ready for site finishing] [factory primed] [pine: factory prefinished [paint] [stain][1]].
  - Exterior grilles are [5/8" putty glaze profile] [7/8" [putty glaze] [ogee] profile] [1-1/4" [putty glaze] [ogee] profile] [2" ogee profile] that are extruded aluminum, finished to match door cladding.
  - Patterns are [Traditional] [Prairie] [Top Row] [Cross] [New England] [Victorian].
  - Insulating glass contains non-glare spacer between the panes of glass.
  - Grilles are adhered to both sides of the insulating glass with VHB acrylic adhesive tape and aligned with the non-glare spacer.

– or –

- Grilles-Between-the-Glass[2]
  - Insulating glass contains 3/4" contoured aluminum grilles permanently installed between two panes of glass (exterior air-space on triple-pane insulating glass).
  - Patterns are [Traditional] [Prairie] [Cross] [Top Row]
  - Interior color is [White] [Tan[3]] [Brown[3]] [Putty[3]] [Black] [Ivory] [Harvest] [Cordovan] [Brickstone].
  - Exterior color[4] is [Standard][1].

Screens

- Finish matches exterior cladding.
- Hinged Insect Screens:
  - Compliance: ASTM D 3656 and SMA 1201.
  - Screen Cloth: InView™ Vinyl-coated fiberglass, 18/18 mesh fiberglass screen cloth complying with the performance requirements of SMA 1201.
  - Extruded-aluminum frame, hinged to door frame.
  - Complete with necessary hardware.
  - Hardware Color: [White] [Tan] [Brown] [Matte Black].

– or –

- Exterior Sliding Insect Screens:
  - Compliance: ASTM D 3656 and SMA 1201.
  - Screen Cloth: InView™ Vinyl-coated fiberglass, 18/18 mesh fiberglass screen cloth complying with the performance requirements of SMA 1201.
  - Extruded-aluminum frame, top hung on 2 adjustable nylon rollers.
  - Complete with necessary hardware.
  - Hardware Color: [White] [Tan] [Brown] [Matte Black].

Sensors

- Optional factory installed integrated security sensors available in vent units.

(1) Contact your local Pella sales representative for current color options.
(2) Available in clear or Low-E insulating glass with argon, and obscure insulated glass.
(3) Tan, Brown or Putty Interior GBG colors are available in single-tone (Brown/Brown, Tan/Tan or Putty/Putty). Other interior colors are also available with Tan or Brown exterior.
(4) Appearance of exterior grille color will vary depending on Low-E coating on glass.

Frame

- Select softwood, immersion treated with Pella's EnduraGuard® wood protection formula in accordance with WDMA I.S.-4. The EnduraGuard formula includes three active ingredients for protection against the effects of moisture, decay, stains from mold and mildew. Plus, an additional ingredient adds protection against termite damage.
- Interior surfaces are [clear pine: [factory primed] [ready to stain]] [mahogany: [factory primed] [ready to stain]] edge-banded and veneered.
- Exterior surfaces are [pine: factory primed] [mahogany: [factory primed] [ready to stain]].
- Any exterior or curved member may have visible finger-jointed surfaces.
- Frame depth between 5-7/8" (149 mm) to 8-9/16" (217 mm), for a wall depth between 4-9/16" (116 mm) to 7.25" (184 mm).
- Solid extruded aluminum sill with [Mill] [Nickel] [Bronze] [Black] [anodized [Clear] [Light Bronze] [Dark Bronze] [Black] [Custom[3]]] finish. [Mahogany threshold for mahogany door] [[oak] [composite black] threshold for [pine] [douglas fir] door].

– or –

- Sill is 1/2" low profile. Material and finish are extruded aluminum with [mill] [Bronze] [anodized [Clear] [Light Bronze] [Dark Bronze] [Black] [Custom[3]]] finish.

Door panels

- Select softwood, immersion treated with Pella's EnduraGuard® wood protection formula in accordance with WDMA I.S.-4. The EnduraGuard formula includes three active ingredients for protection against the effects of moisture, decay, stains from mold and mildew. Plus, an additional ingredient adds protection against termite damage.
- Interior exposed surfaces are veneered with [clear pine] [mahogany]. Any curved member may have visible finger-jointed surfaces.
- Exterior surfaces are [wood composite: factory primed] [mahogany: [factory primed] [ready to stain]].
- Panel stiles and rails are five-ply construction, randomly finger-jointed blocks laminated with water-resistant glue and veneered on both sides.
- Corners are urethane-silicone hybrid-sealed and secured with metal fasteners.
- Panel thickness is 2-1/16" (52mm).

Weatherstripping

- Dual-durometer extruded polymer along perimeter of door frame. On bottom panels, dual-durometer extruded polymer interior air seal and rigid polymer exterior facing bristle-strip.

Glazing System

- Quality fully-tempered float glass complying with ASTM C 1048.
- Custom and high altitude glazing available.
- Silicone-glazed, 13/16" double-pane, dual-seal, insulating glass
  - [Clear] [Obscure] [Reflective Bronze] with air.
  - [Obscure Low-E [with argon]] [Advanced] [AdvancedComfort] [SunDefense™] [SunDefense+] [NaturalSun] [NaturalSun+] Low-E [with argon]].
  - [Bronze] [Gray] [Green] Advanced Low-E [with argon].

- or –

- Silicone-glazed, 13/16" double-pane, dual-seal, laminated, insulating glass
  - Clear with air.
  - [Advanced] [SunDefense™] Low-E with argon.
  - [Bronze] [Gray] [Green] Advanced Low-E with argon.

– or –

- Silicone-glazed, 1" triple-pane, dual-seal, insulating glass
  - [Obscure Low-E with [argon][air]] [Advanced] [SunDefense™] [NaturalSun] Low-E [with argon].

Exterior

- [Wood composite: factory primed with one coat acrylic latex] [mahogany [factory primed with one coat acrylic latex] [Unfinished, ready for site finishing]].

Interior

- [Unfinished, ready for site finishing] [factory primed with one coat acrylic latex] [factory prefinished [paint] [stain][3]].

Hardware

Hinges

- Hinges are adjustable to help with installation.
- Doors 6' 10" to 7' 0" frame height will have three (3) hinges per panel.
- Doors over 7' 0" frame height up to and including 8' 0" frame height will have four (4) hinges per panel.
- Doors over 8' 3" frame height up to and including 9' 0" frame height will have five (5) hinges per panel.
- Doors over 9' 0" frame height will have six (6) hinges per panel.

Locks

- Mortised and keyed multi-point locking system, center deadbolt and shoot-bolts at head and sill will engage simultaneously.
- Doors 8' 0" frame height and below will have one (1) strike at the head, one (1) strike at the sill and one (1) center deadbolt.
- Doors over 8' 0" frame height up to and including 10' 0" frame height will have one (1) strike at the head, one (1) strike at the sill and three (3) locking points at the stile.
- Solid brass handles and keylock with K-keyway cylinder.
- Key cylinder finish is [Brass] [Stainless Steel] [Matte Black].

Finish

- Hardware finish is (Handle, Hinges and Strike) [baked enamel [White] [Champagne] [Brown] [Matte Black]] [PVD High Performance finish [Satin Brass] [Satin Nickel]] [Oil-Rubbed Bronze] [Distressed Bronze] [Distressed Nickel] [Polished Nickel] [Polished Chrome].

Optional Products

Grilles

- Integral Light Technology® grilles
  - Interior grilles are [5/8"] [7/8"] [1-1/4"] ogee profile that are solid [pine] [mahogany]. Interior surfaces are [unfinished, ready for site finishing] [factory primed] [pine: factory prefinished [paint] [stain][3]].
  - Exterior grilles are [5/8"] [7/8"] [1-1/4"] putty glaze profile that are solid [pine] [mahogany]. Exterior surfaces are water repellent, preservative-treated in accordance with WDMA I.S.-4, and are factory primed.
  - Patterns are [Traditional] [Prairie] [Top Row] [Cross] [New England] [Victorian].
  - Insulating glass contains non-glare spacer between the panes of glass.
  - Grilles are adhered to both sides of the insulating glass with VHB acrylic adhesive tape and aligned with spacer

– or –

- Grilles-Between-the-Glass[2]
  - Insulating glass contains 3/4" contoured aluminum grilles permanently installed between two panes of glass (exterior air-space on triple-pane insulating glass).
  - Patterns are [Traditional] [Prairie] [Cross] [Top Row]
  - Interior color is [White] [Tan[2]] [Brown[2]] [Putty[2]] [Black] [Ivory] [Harvest] [Cordovan] [Brickstone].
  - Exterior color[4] is [Standard[3]].

Sensors

- Optional factory installed integrated security sensors available in vent units.

(1) Available in clear or Low-E insulating glass with argon, and obscure insulated glass.
(2) Tan, Brown and Putty Interior GBG colors are available in single-tone (Brown/Brown, Tan/Tan or Putty/Putty). Other interior colors are also available with Tan or Brown exterior.
(3) Contact your local Pella sales representative for current color options.
(4) Appearance of exterior grille color will vary depending on Low-E coating on glass.

Pella® Reserve™ Traditional In-Swing Patio Door

Unit Sections – Aluminum-Clad Exterior - Wood Collection

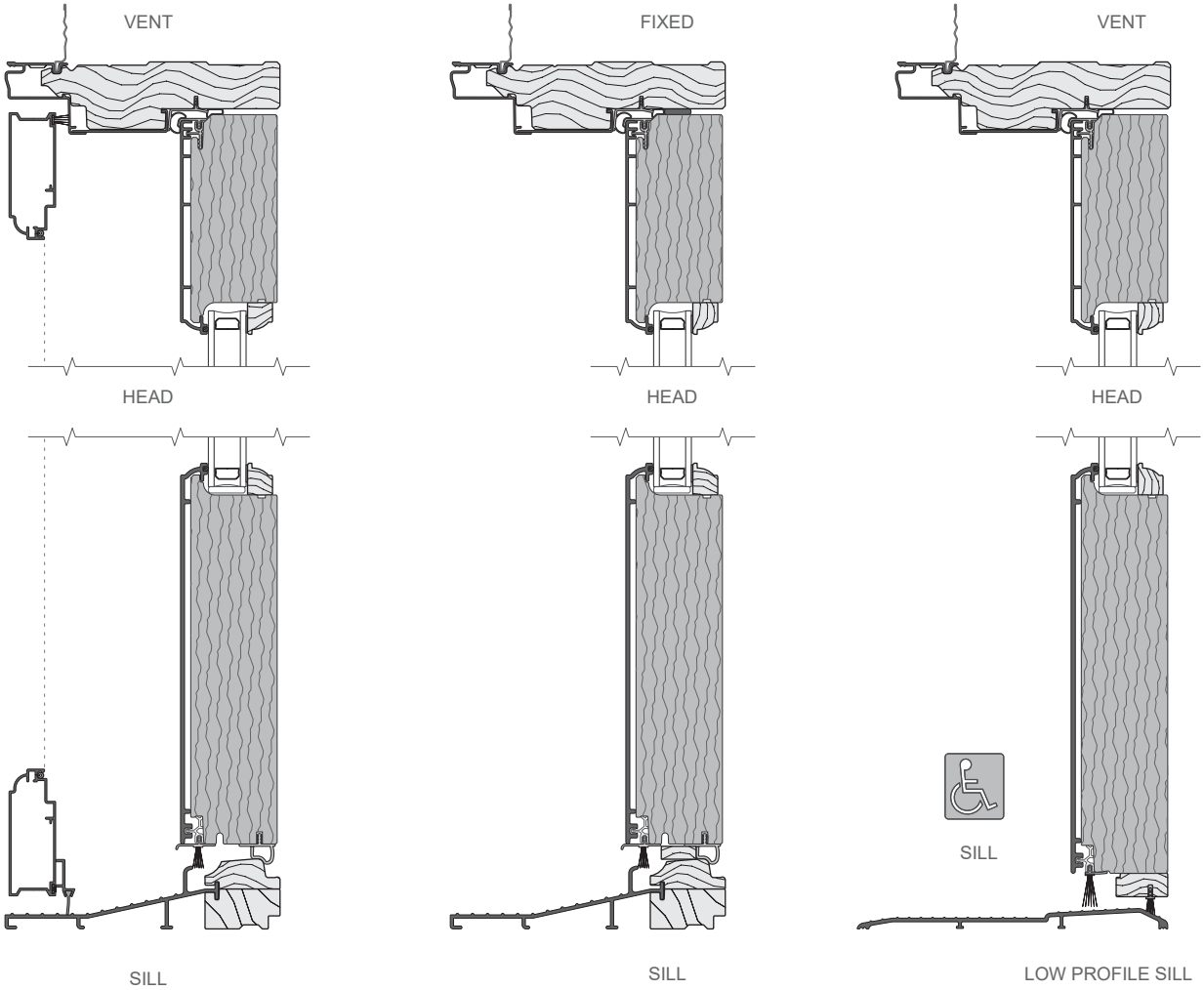

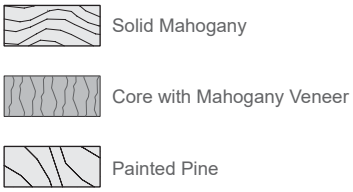

Scale 3" = 1' 0"
All dimensions are approximate.
Water resistance is 0 psf for doors with low profile sill.

Unit Sections – Aluminum-Clad Exterior - Wood Collection

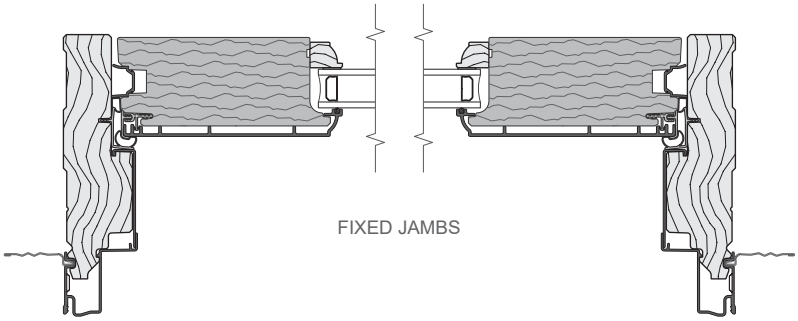

FIXED JAMBS

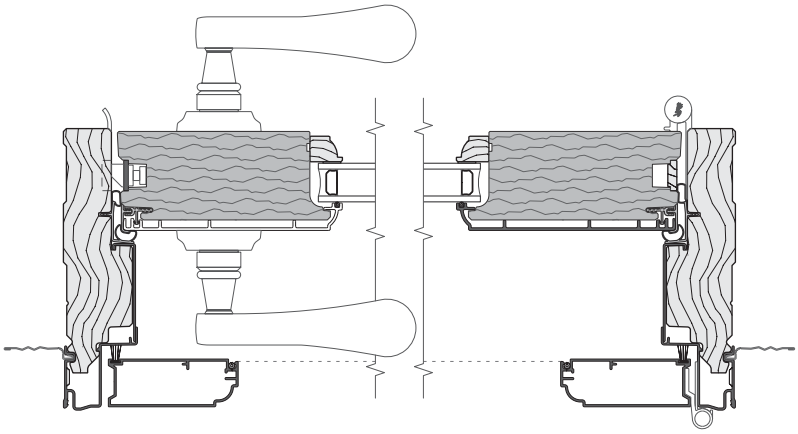

LOCK JAMB

HINGE JAMB

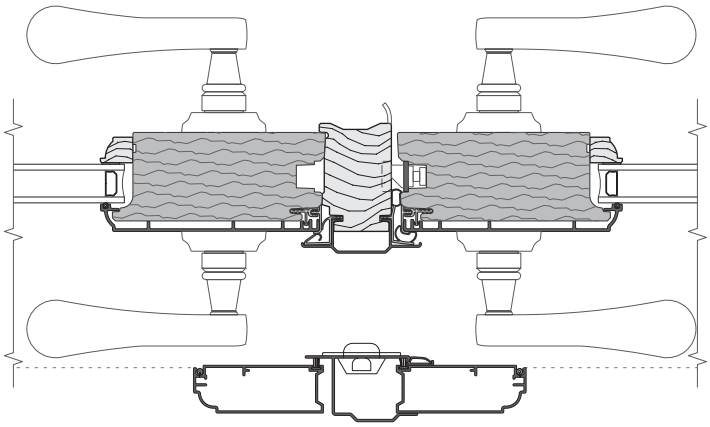

PASSIVE / ACTIVE
ASTRAGAL

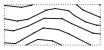

Solid Mahogany

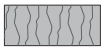

Core with Mahogany Veneer

Scale 3" = 1' 0"
All dimensions are approximate.

Pella® Reserve™ Traditional In-Swing Patio Door

Unit Sections – Aluminum-Clad Exterior - Wood Collection

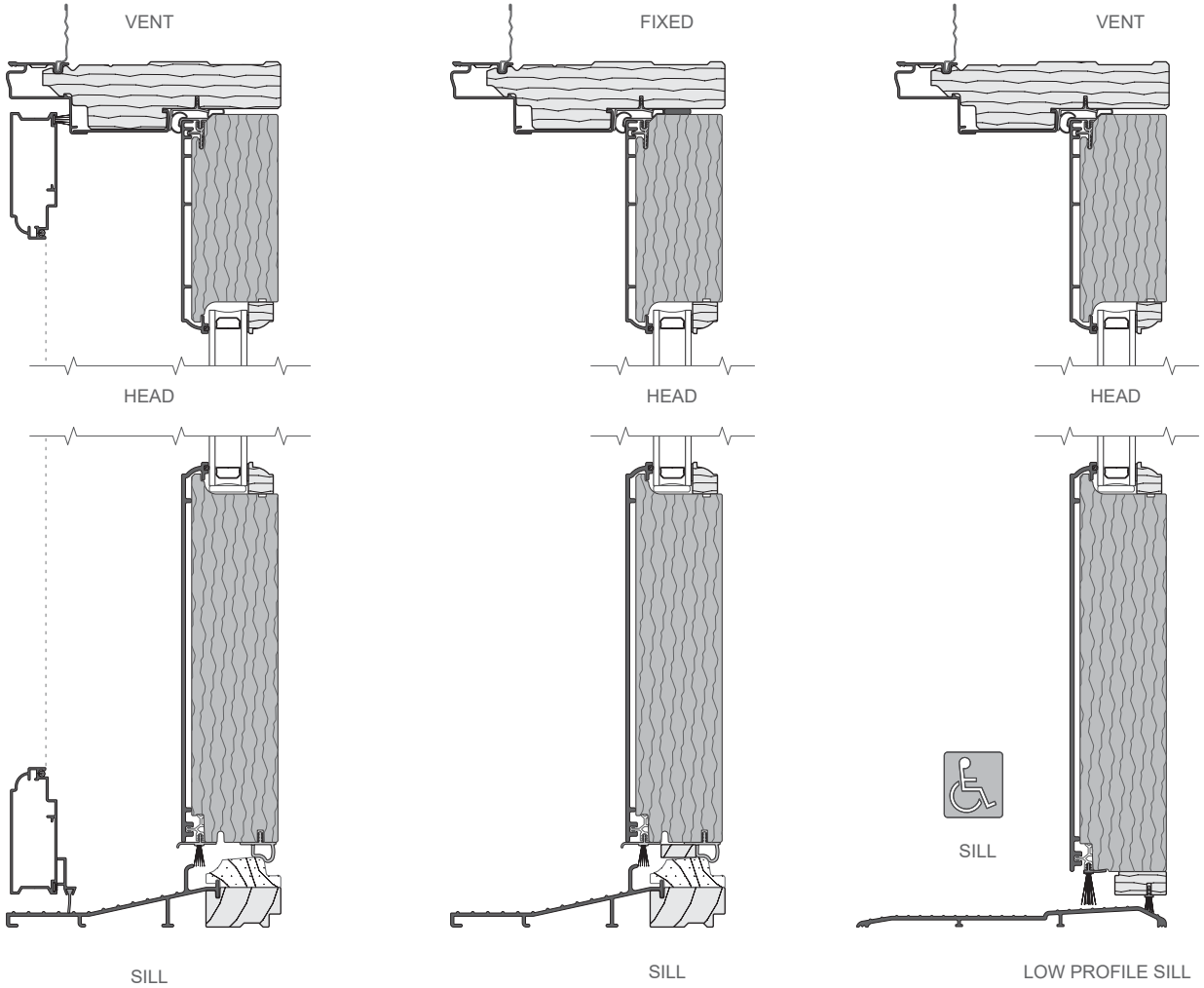

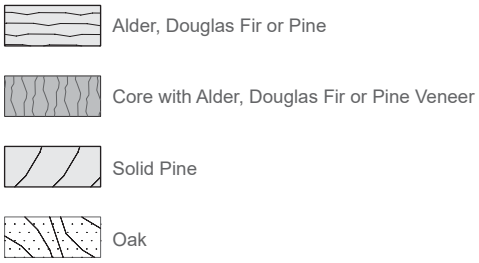

Scale 3" = 1' 0"
All dimensions are approximate.

Unit Sections – Aluminum-Clad Exterior - Wood Collection

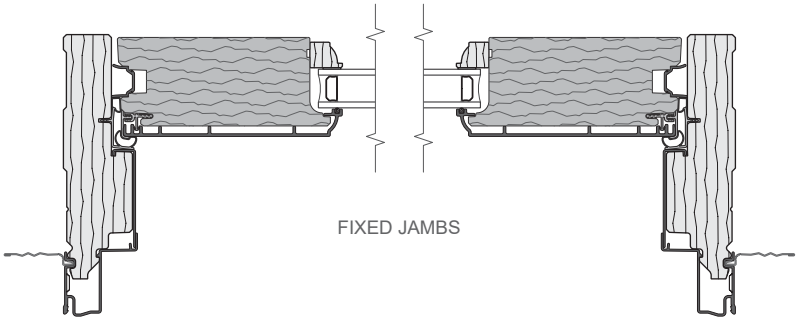

FIXED JAMBS

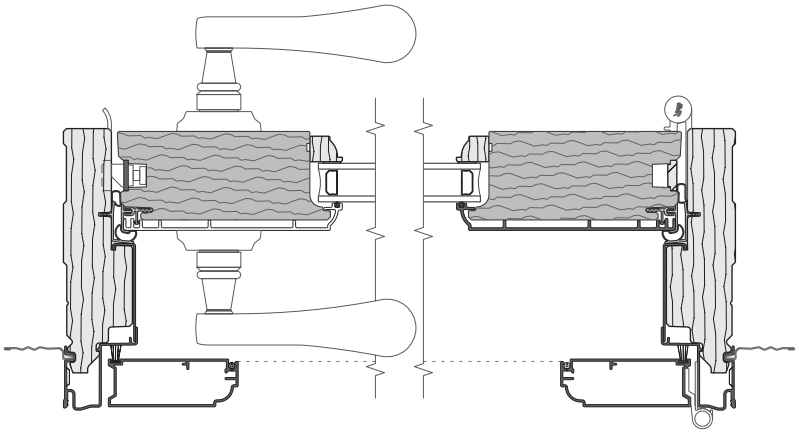

LOCK JAMB

HINGE JAMB

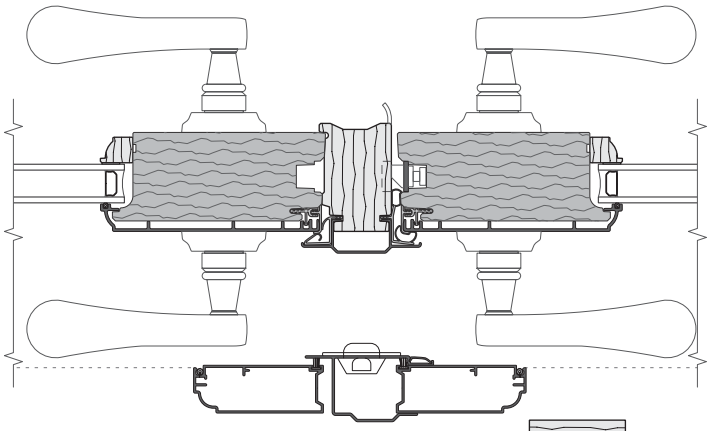

PASSIVE / ACTIVE
ASTRAGAL

Alder, Douglas Fir or Pine

Core with Alder, Douglas Fir or Pine Veneer

Solid Pine

Oak

Scale 3" = 1' 0"
All dimensions are approximate.

Unit Sections – Aluminum-Clad Exterior, Ogee Exterior Profile

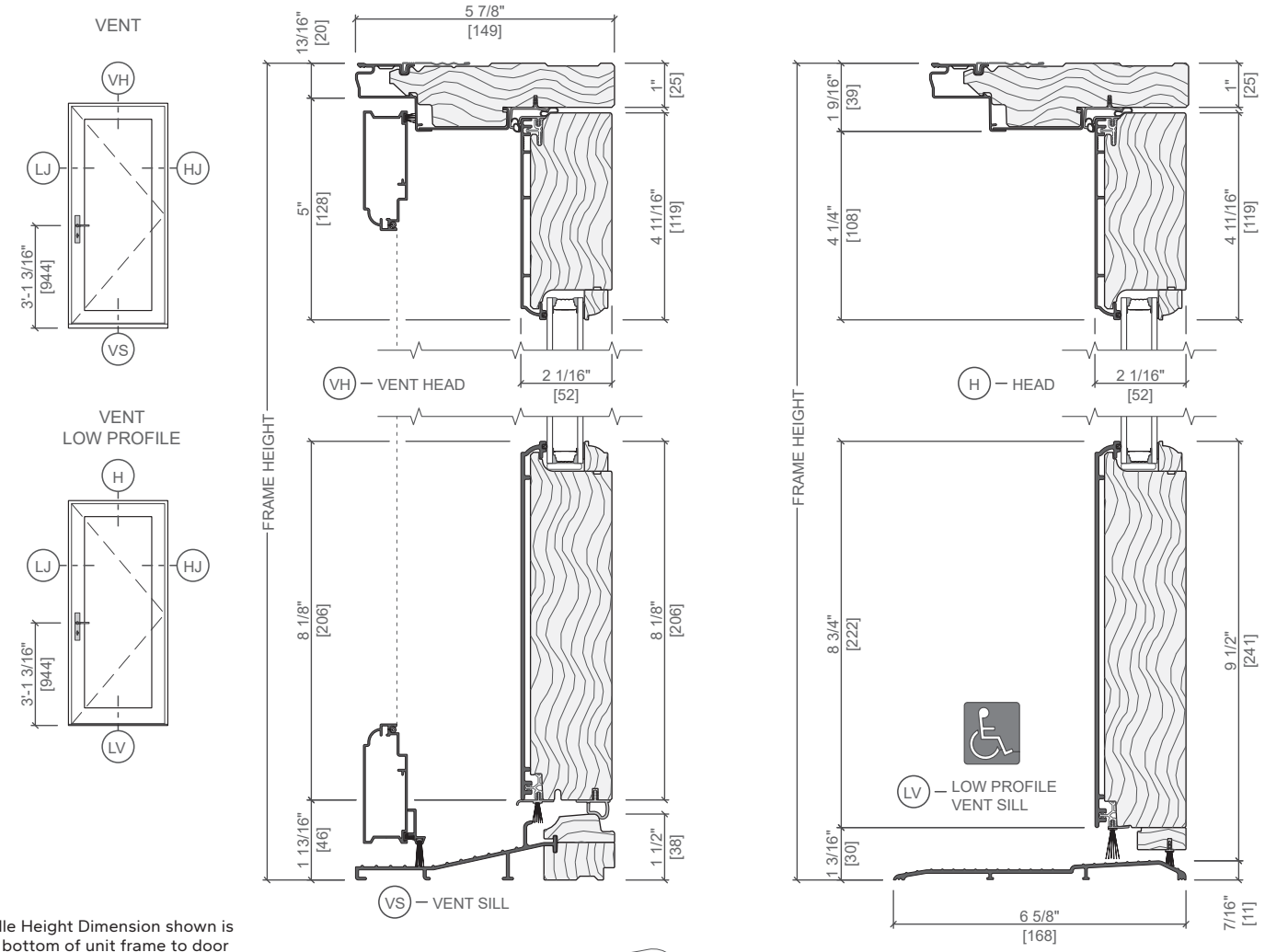

Handle Height Dimension shown is from bottom of unit frame to door handle. Installation method used and finished flooring conditions will cause handle height to vary. Doors not using the standard Pella multi-point lock and hardware (specified as 'No lock/No Bore') are not Hallmark certified.

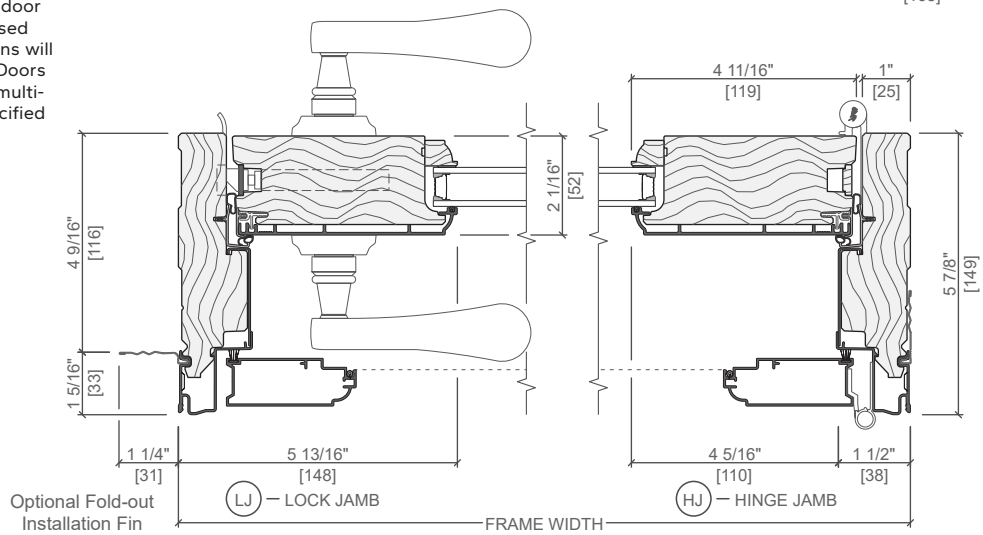

Scale 3" = 1' 0"
All dimensions are approximate.
Water resistance is 0 psf for doors with low profile sill

Pella® Reserve™ Traditional In-Swing Patio Door

Unit Sections – Aluminum-Clad Exterior, Ogee Exterior Profile

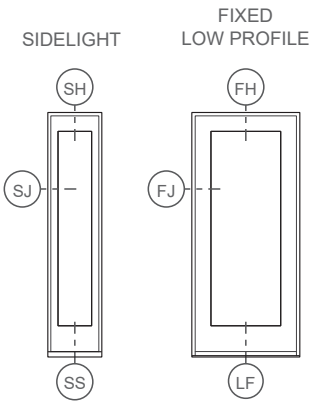

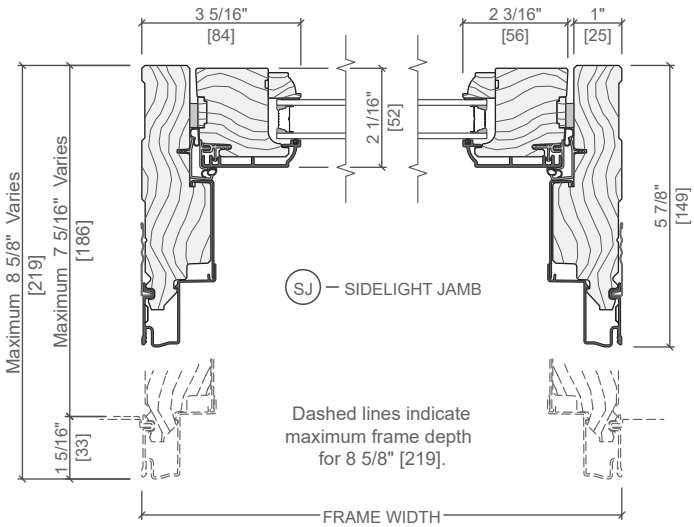

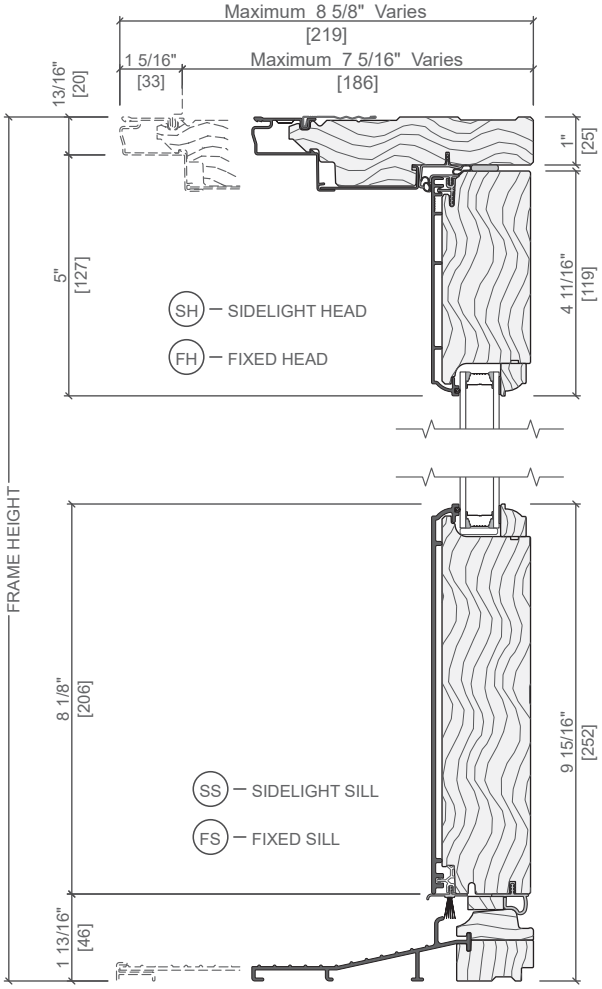

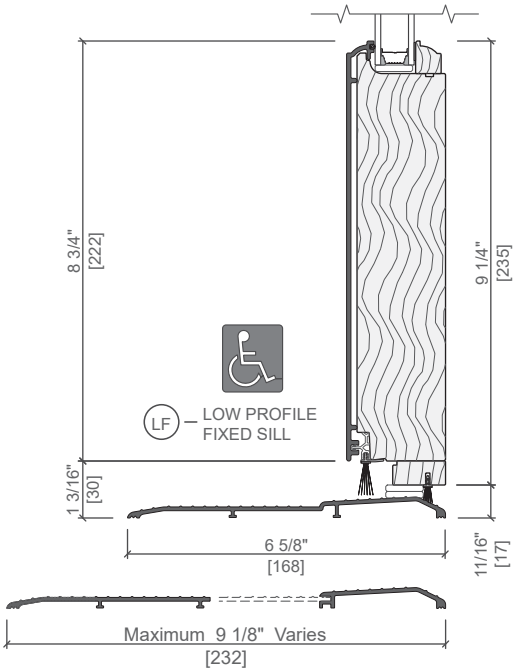

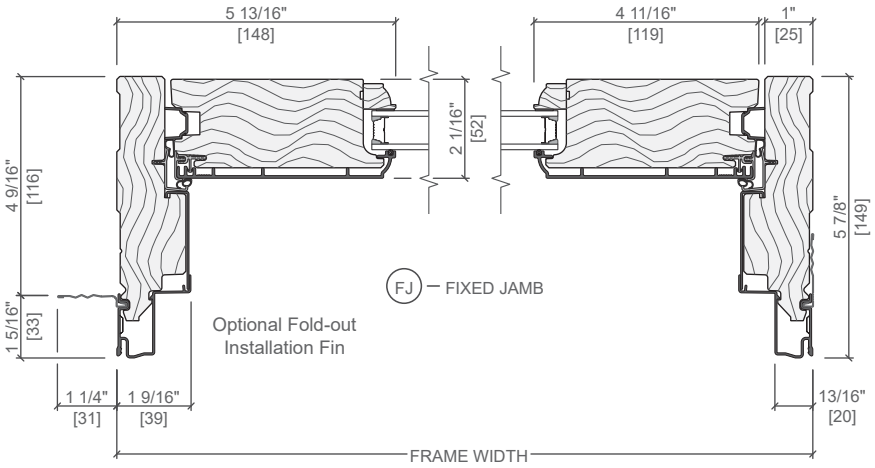

Scale 3" = 1' 0"
All dimensions are approximate.

Water resistance is 0 psf for doors with low profile sill.

Unit Sections – Aluminum-Clad Exterior, Ogee Exterior Profile

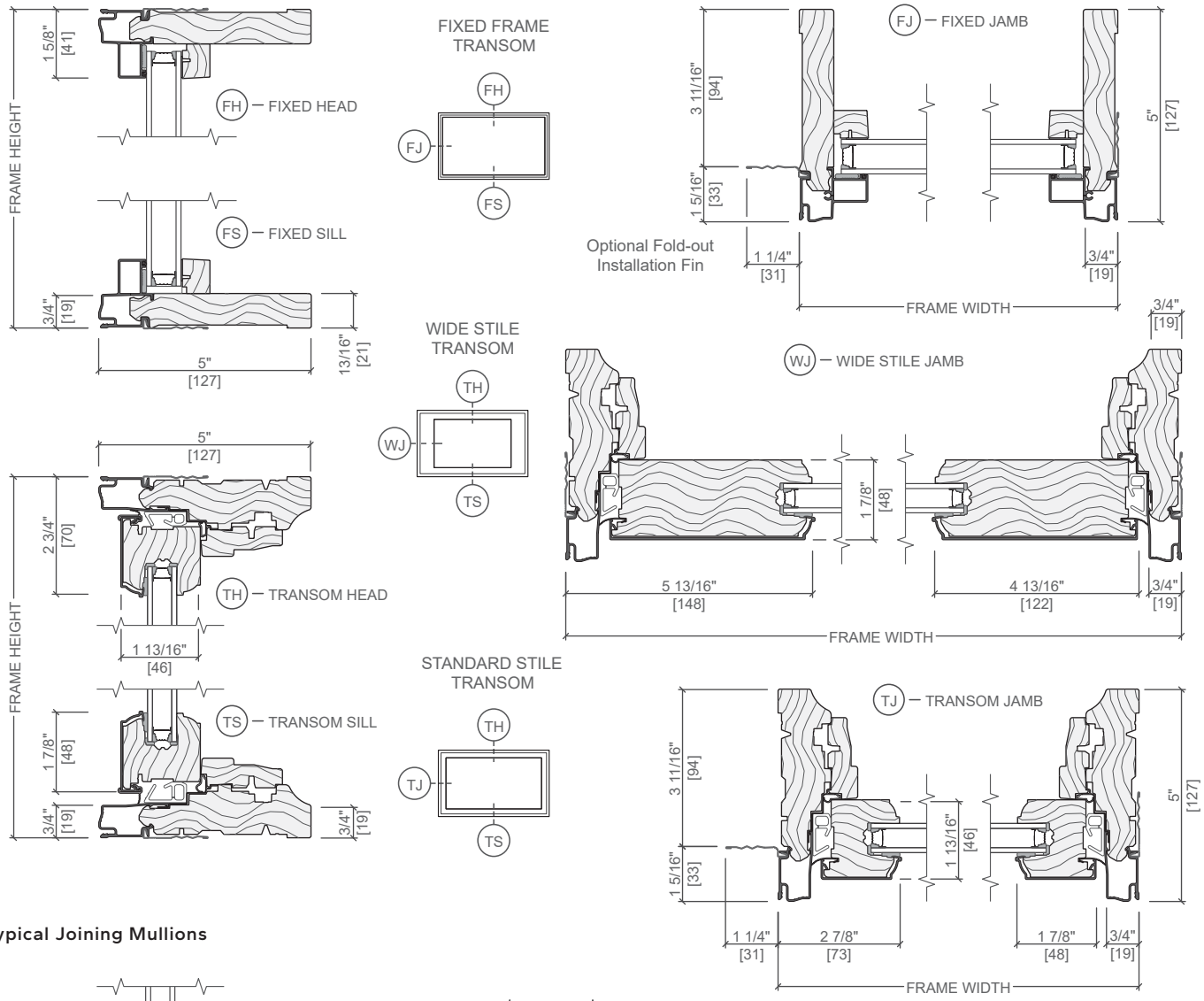

Typical Joining Mullions

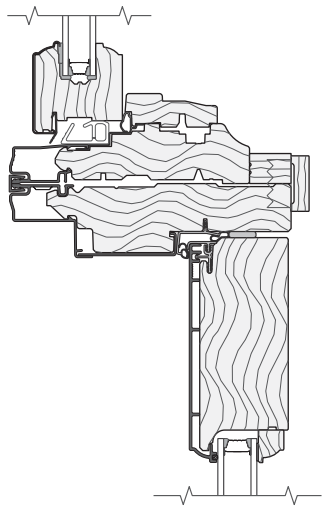

HORIZONTAL JOINING MULLION
CASEMENT / IN-SWING FRENCH DOOR

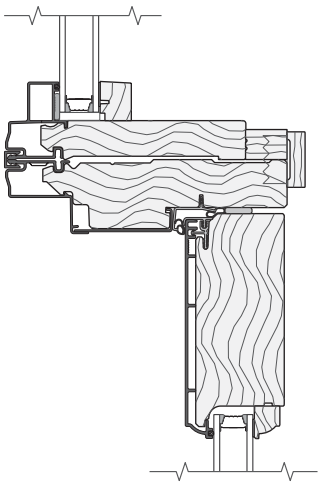

HORIZONTAL JOINING MULLION
FIXED FRAME / IN-SWING FRENCH DOOR

Scale 3" = 1' 0"
All dimensions are approximate.

See www.Pella.com for mullion limitations and reinforcing requirements.

Unit Sections – Aluminum-Clad Exterior, Ogee Exterior Profile

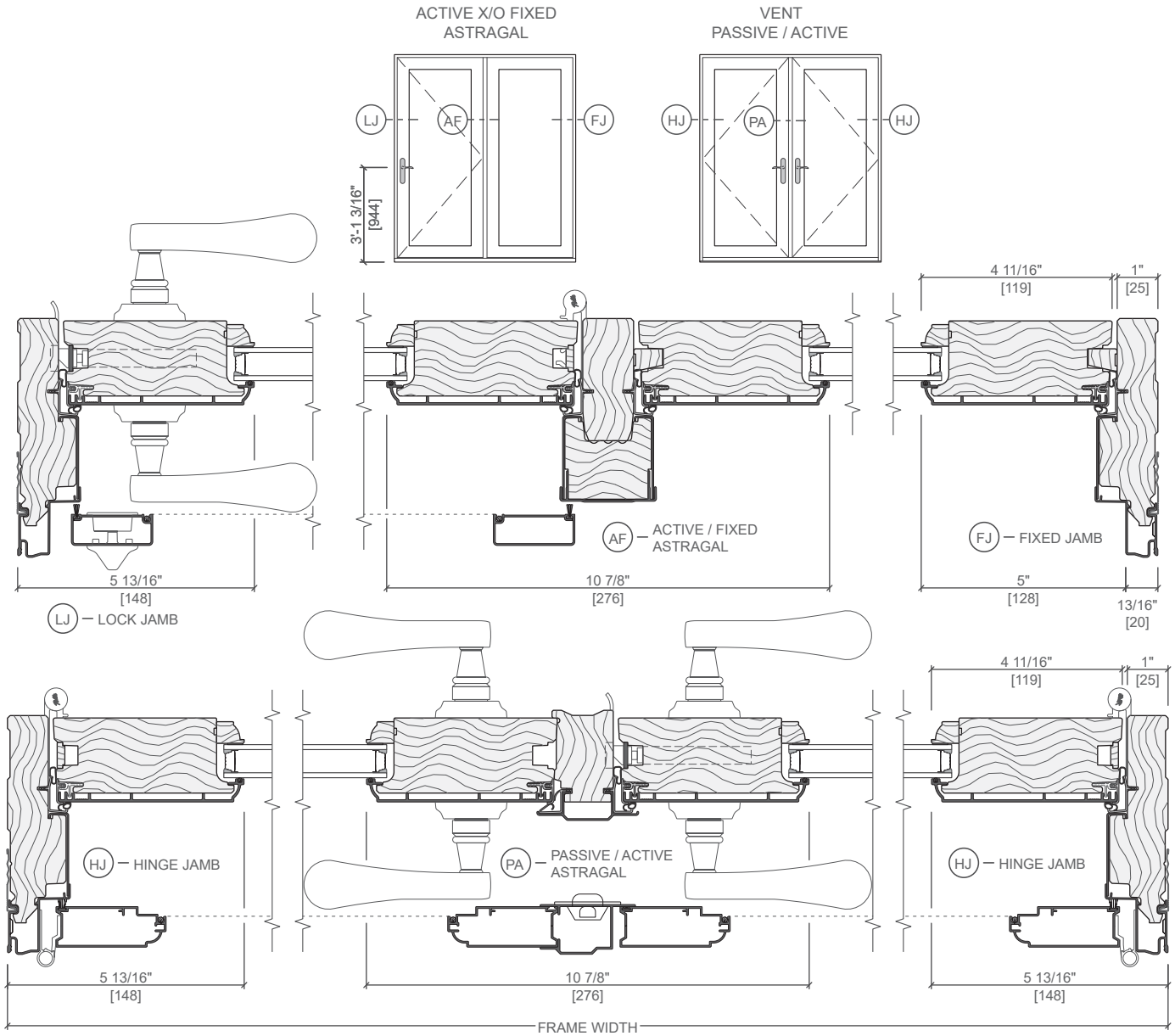

Typical Joining Mullions

- Use standard joining mullions when joining fixed door panels.
- Sidelights or fixed panels may be joined directly to operable door panels. Composite must be installed with head drip fin and installation fins per standard installation instructions.
- Structural mullion must be used for all other combinations.

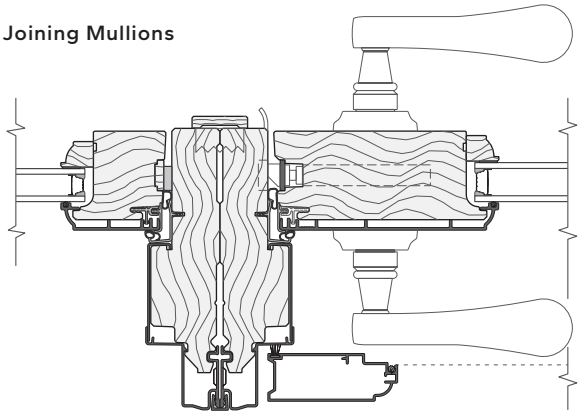

VERTICAL JOINING MULLION
SIDELIGHT JAMB / LOCK JAMB

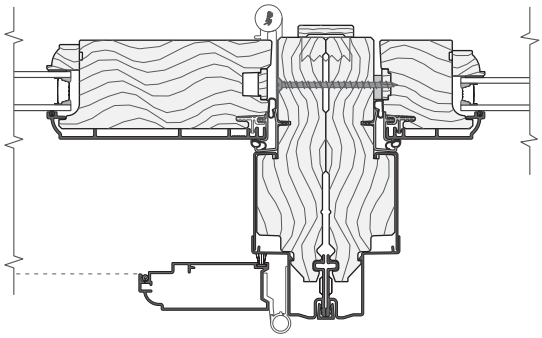

VERTICAL JOINING MULLION
HINGE JAMB / SIDELIGHT

Scale 3" = 1' 0"
All dimensions are approximate.

Pella® Reserve™ Traditional In-Swing Patio Door

Unit Sections – Aluminum-Clad Exterior, Ogee Exterior Profile, Triple-Pane

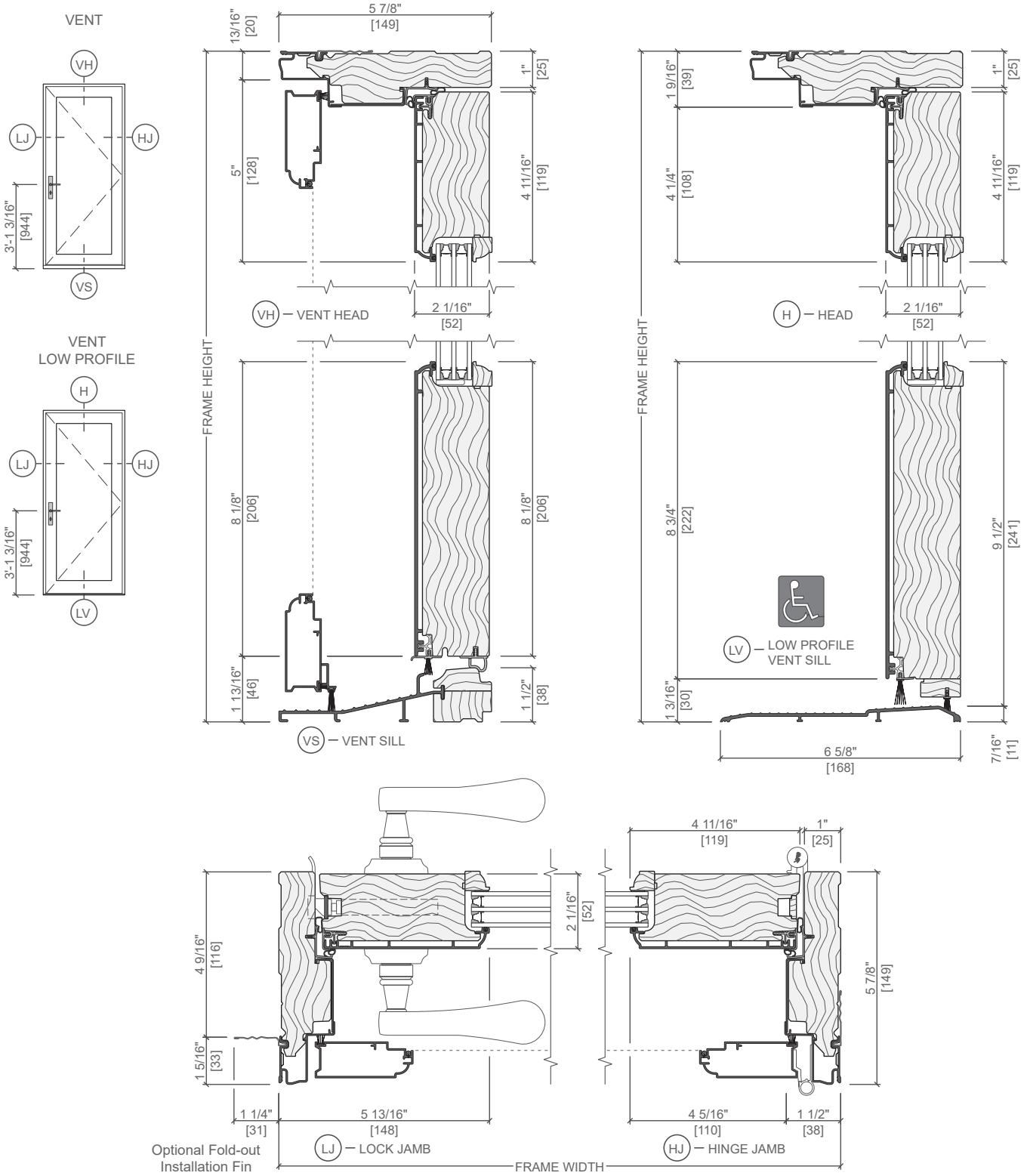

Scale 3" = 1' 0"
All dimensions are approximate.
Water resistance is 0 psf for doors with low profile sill

Unit Sections – Aluminum-Clad Exterior, Putty Glaze Exterior Profile

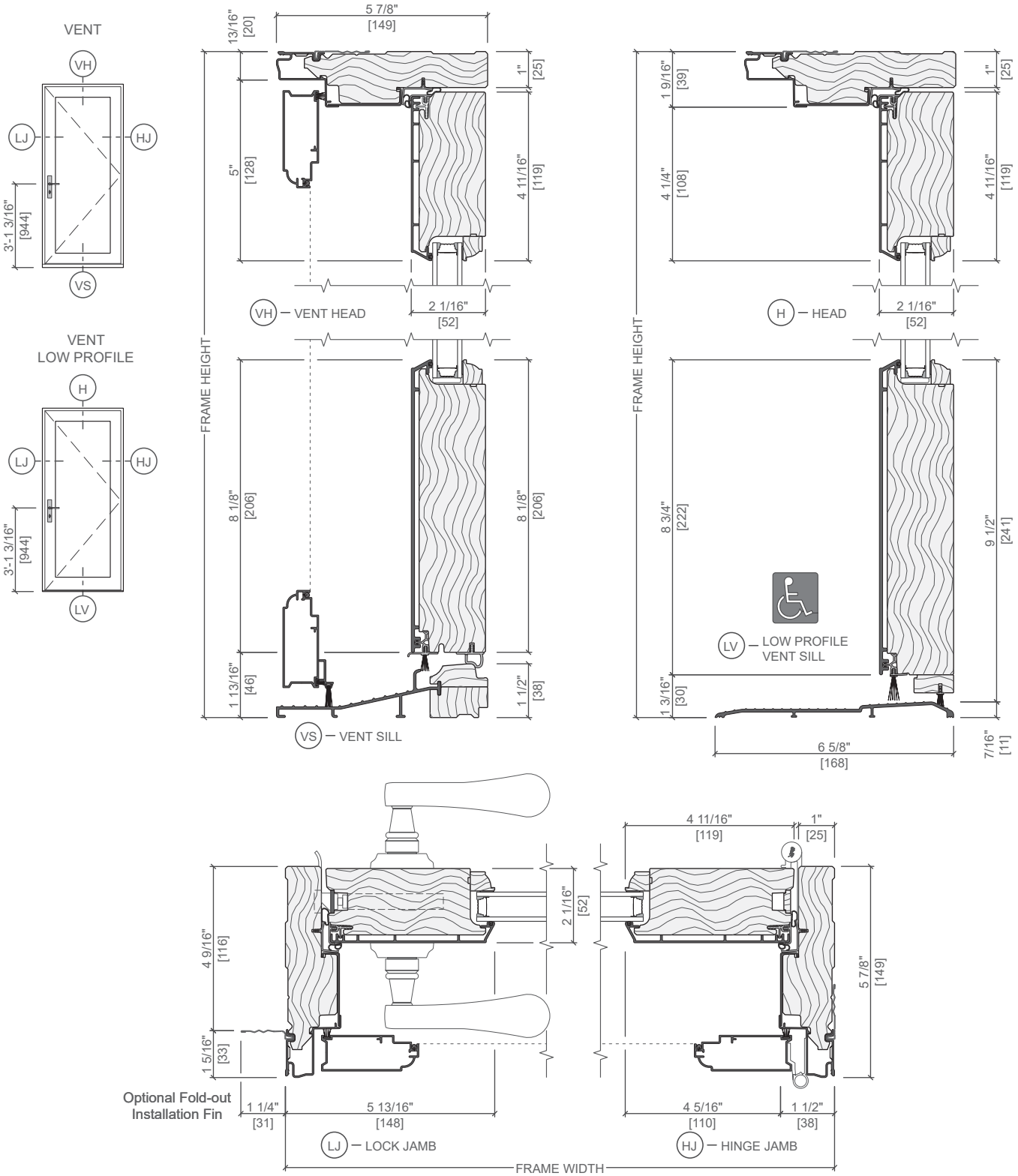

Scale 3" = 1' 0"
All dimensions are approximate.
Water resistance is 0 psf for doors with low profile sill

Pella® Reserve™ Traditional In-Swing Patio Door

Unit Sections – Aluminum-Clad Exterior, Putty Glaze Exterior Profile

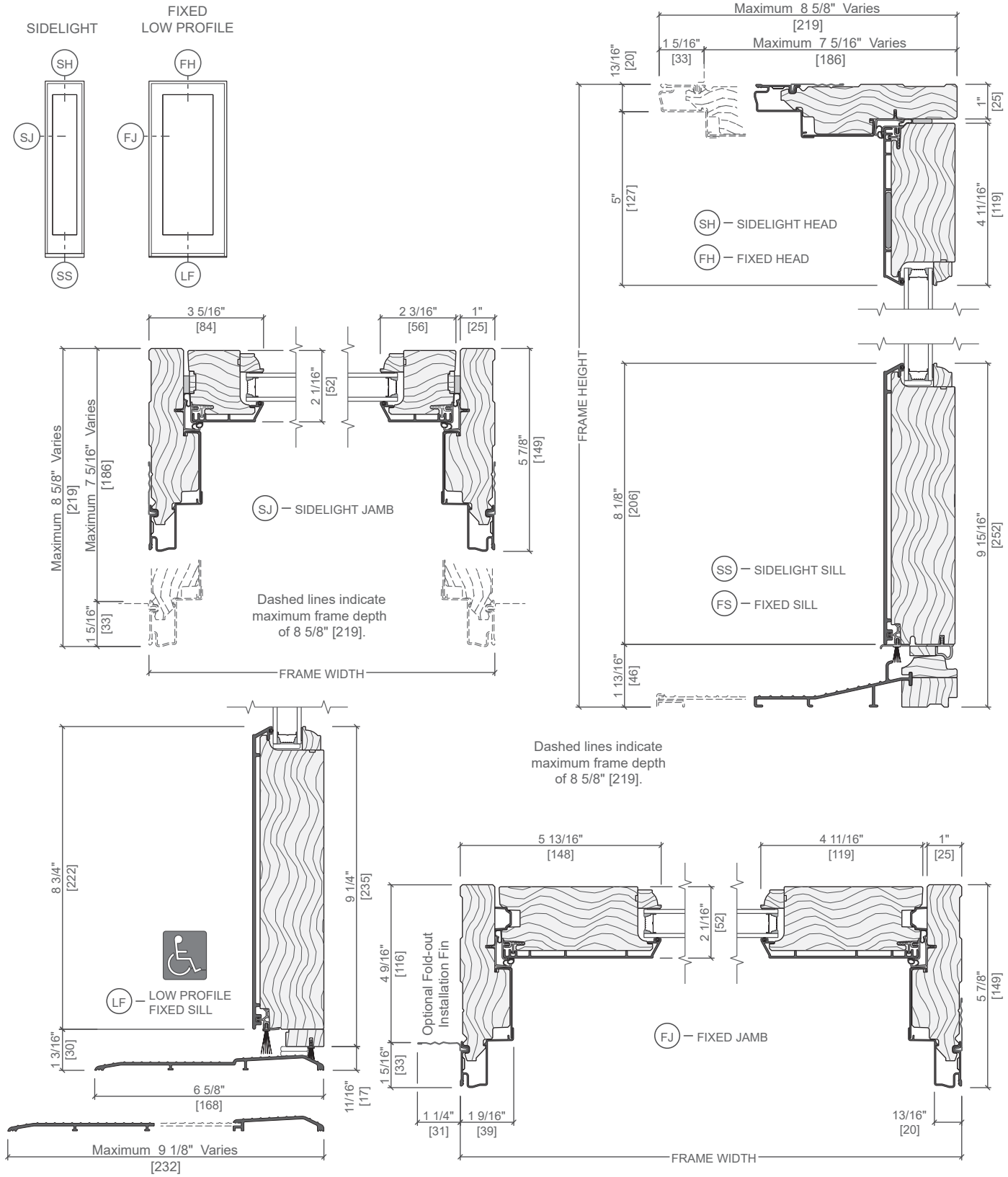

Scale 3" = 1' 0"
All dimensions are approximate.

Water resistance is 0 psf for doors with low profile sill.

Unit Sections – Aluminum-Clad Exterior, Putty Glaze Exterior Profile

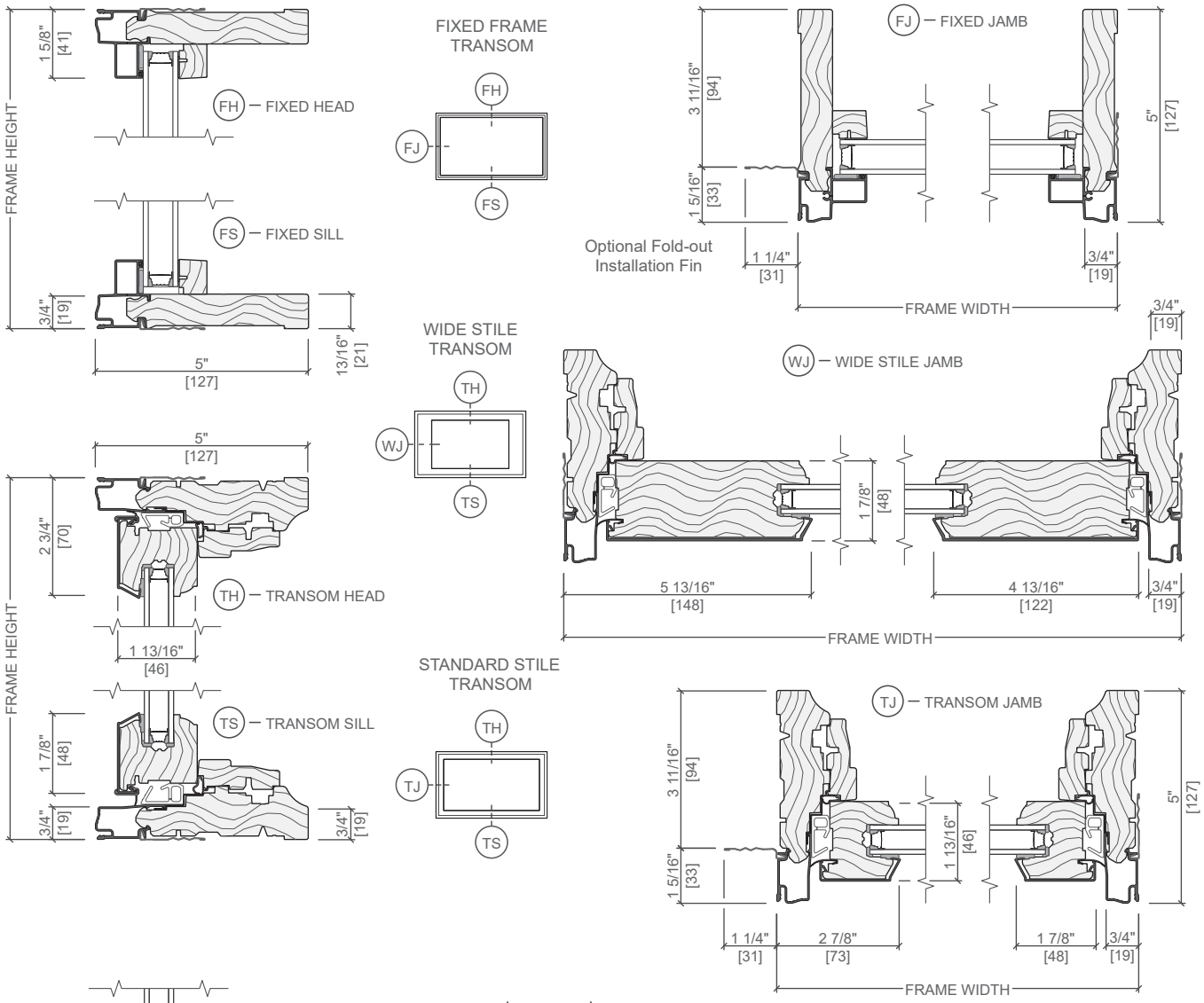

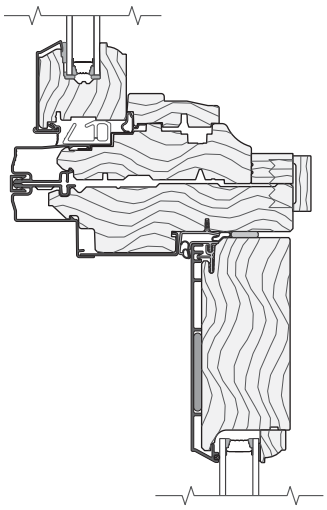

HORIZONTAL JOINING MULLION
CASEMENT / IN-SWING FRENCH DOOR

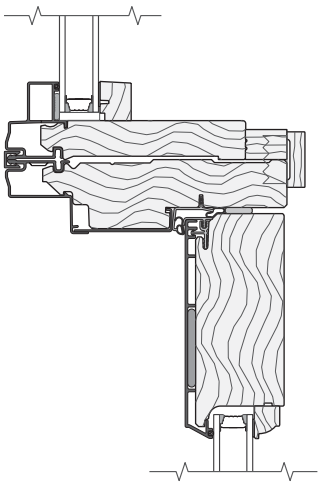

HORIZONTAL JOINING MULLION
FIXED FRAME / IN-SWING FRENCH DOOR

Scale 3" = 1' 0"
All dimensions are approximate.

Unit Sections – Aluminum-Clad Exterior, Putty Glaze Exterior Profile

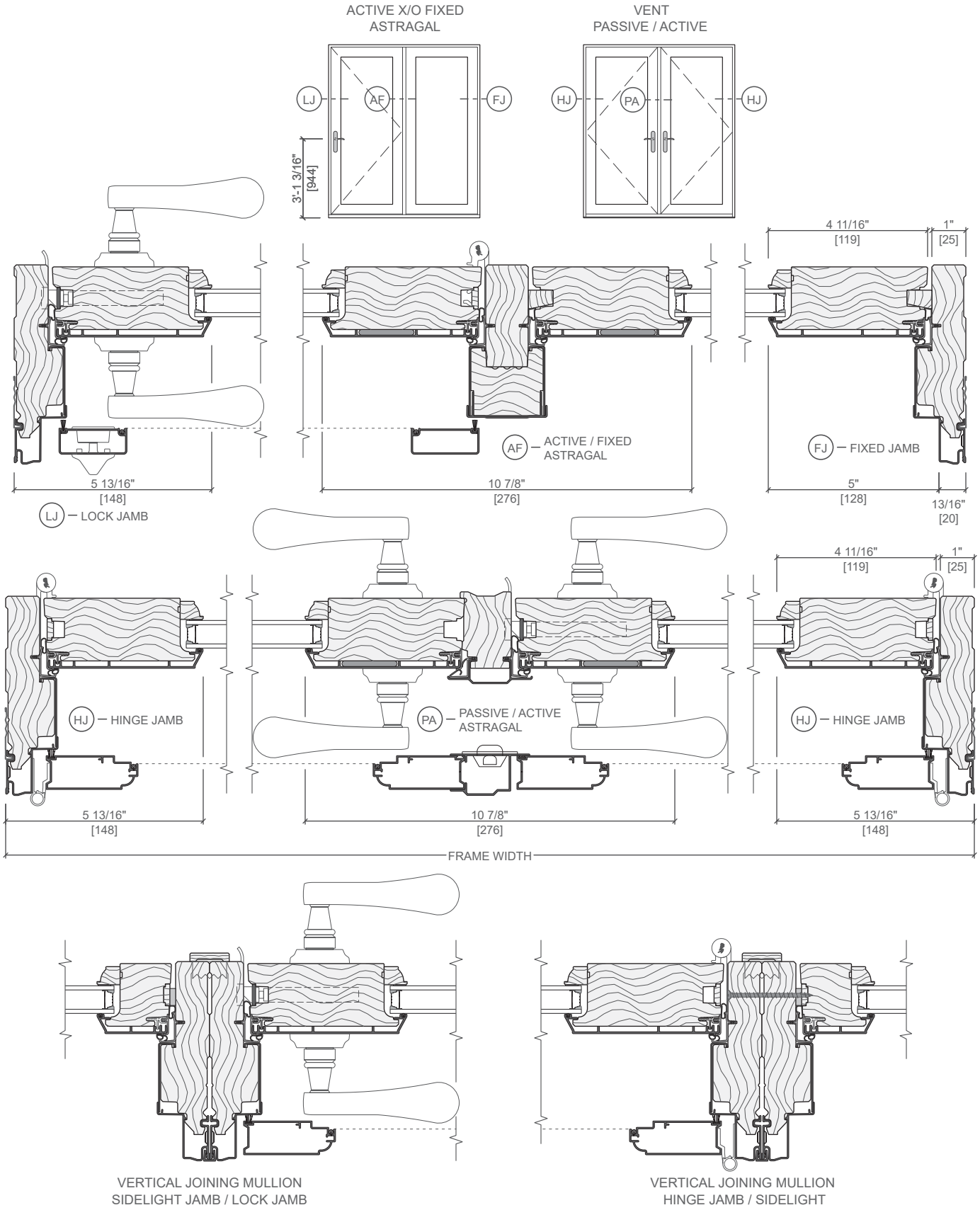

Unit Sections – Aluminum-Clad Exterior, Putty Glaze Exterior Profile, Triple-Pane

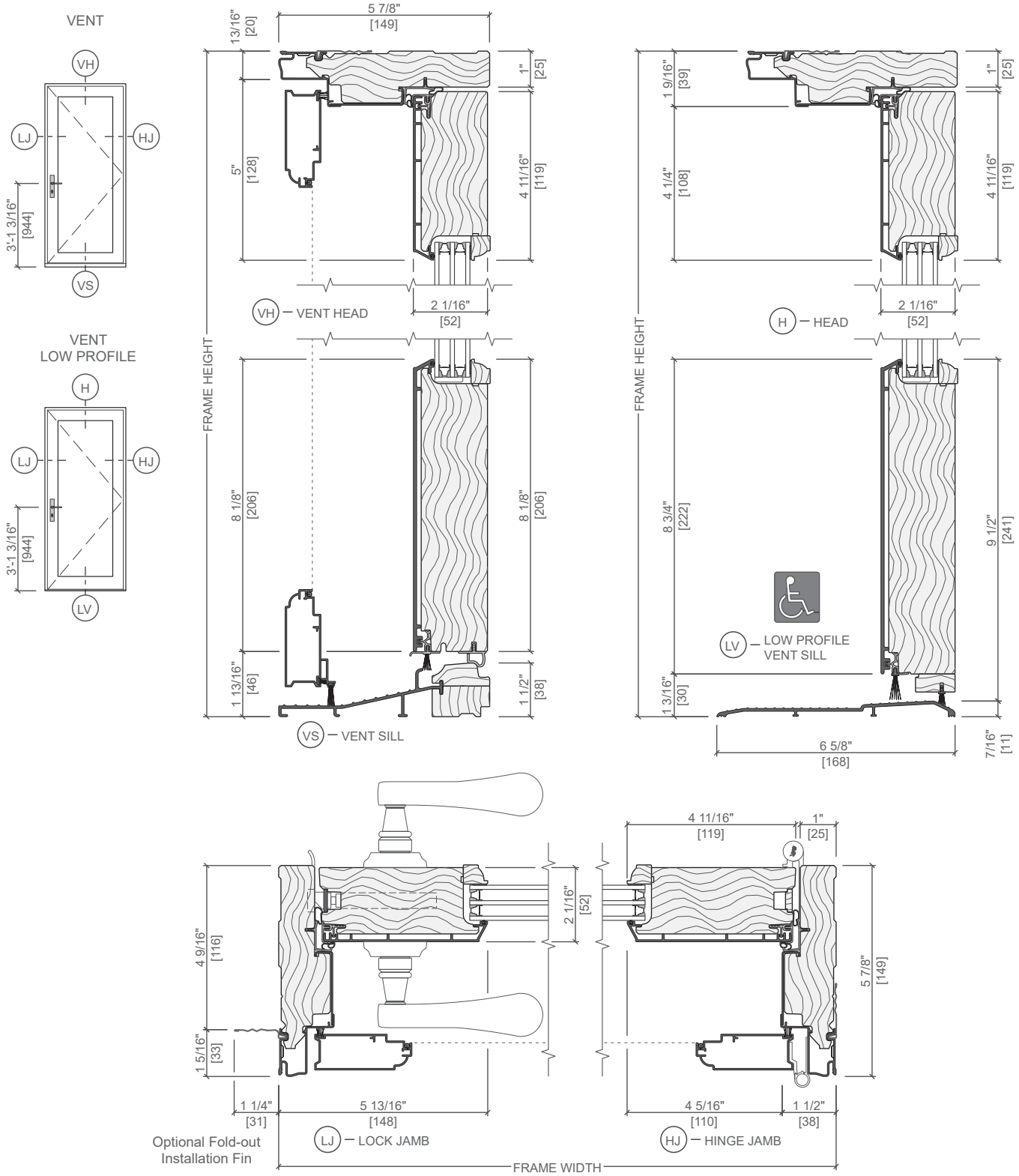

Unit Sections – Wood Exterior, Putty Glaze Exterior Profile

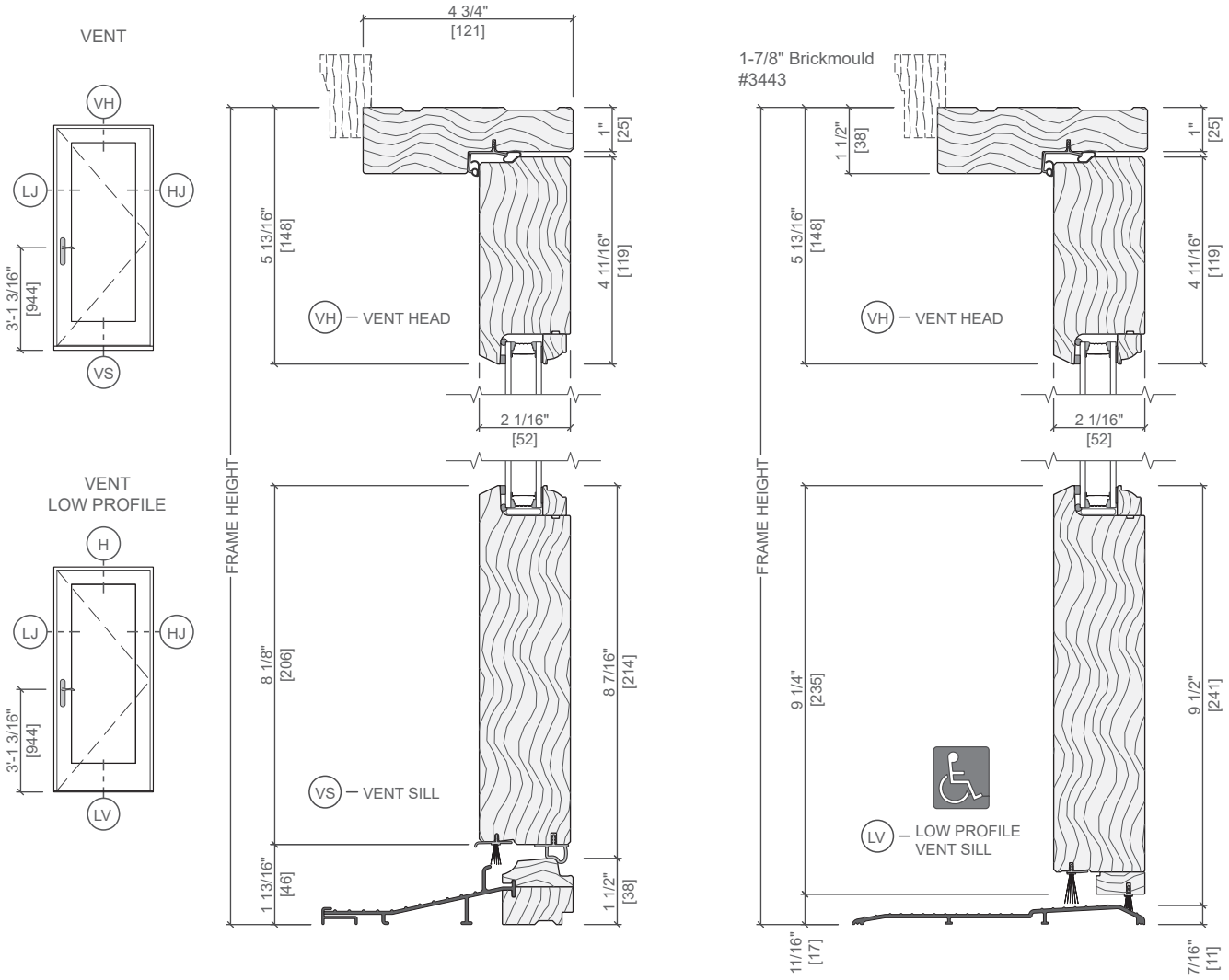

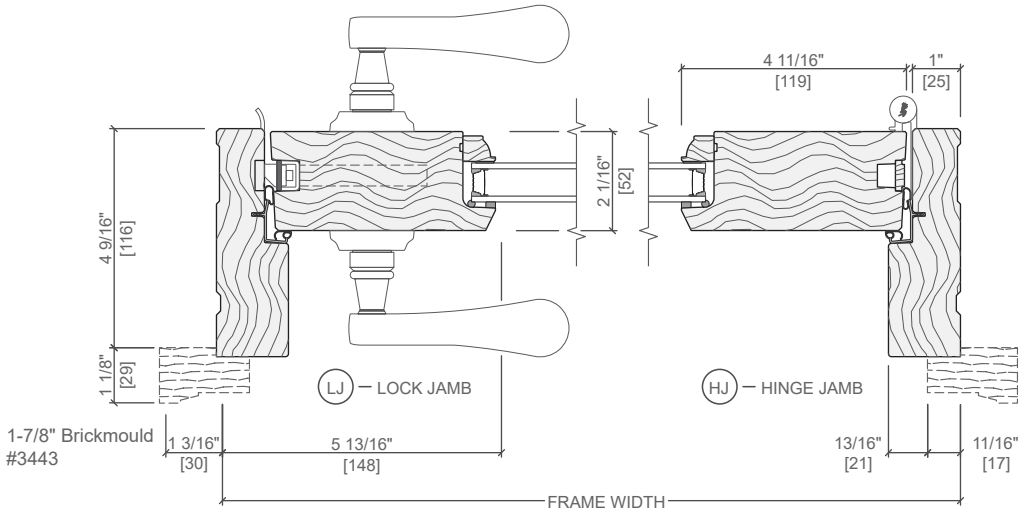

Scale 3" = 1' 0"
All dimensions are approximate.

Pella® Reserve™ Traditional In-Swing Patio Door

Unit Sections – Wood Exterior, Putty Glaze Exterior Profile

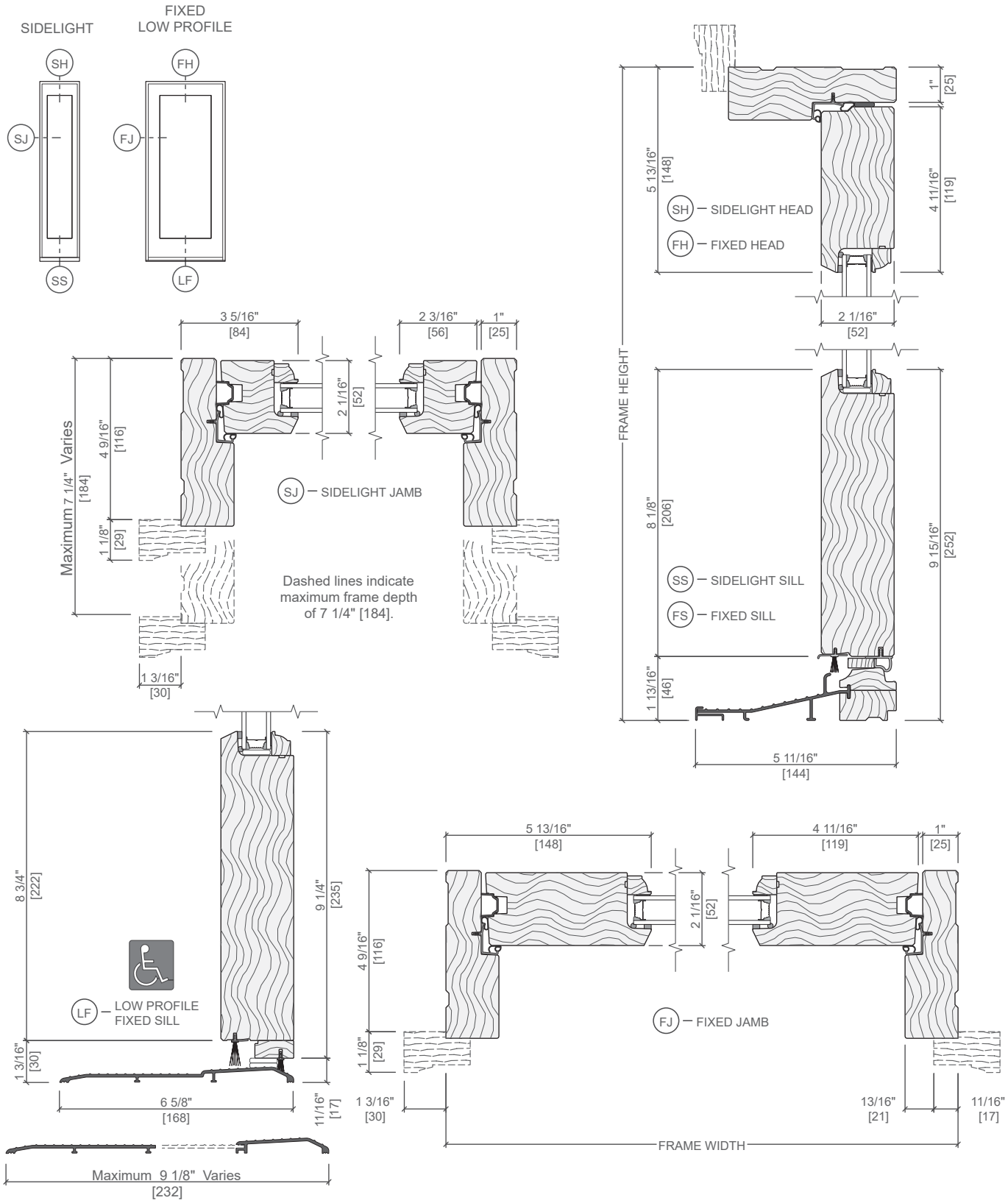

Scale 3" = 1' 0"
All dimensions are approximate.

Water resistance is 0 psf for doors with low profile sill.

STANDARD STILE TRANSOM

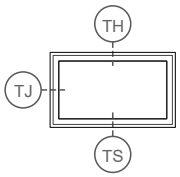

WIDE STILE TRANSOM

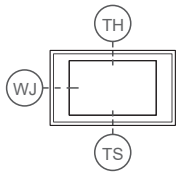

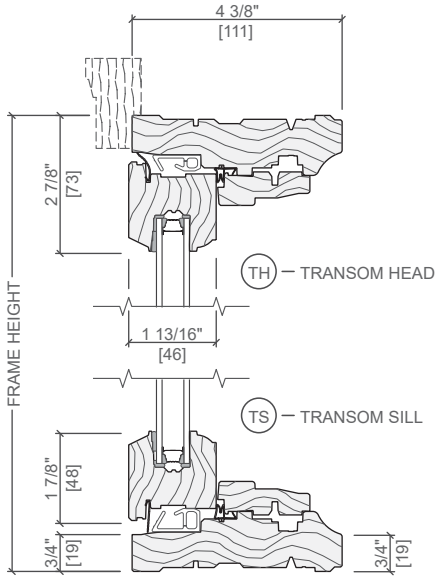

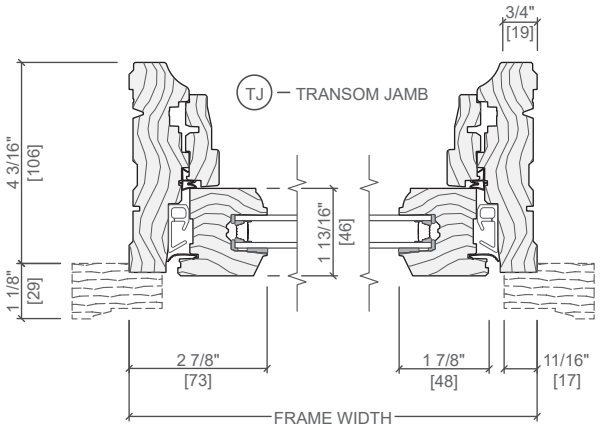

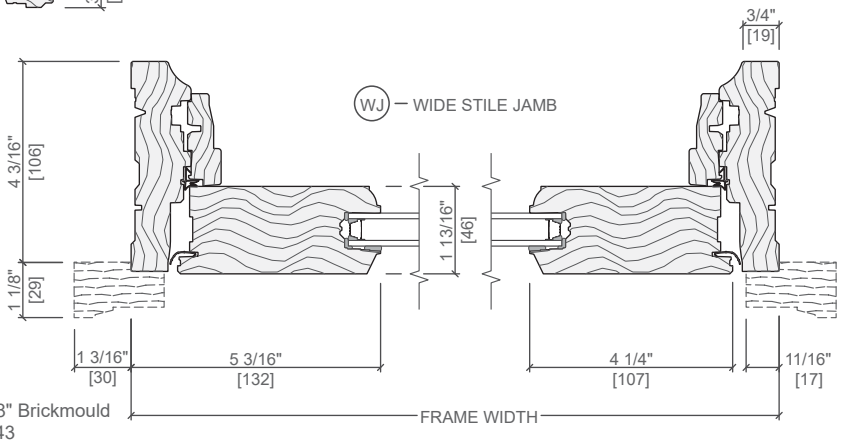

VENT
PASSIVE / ACTIVE

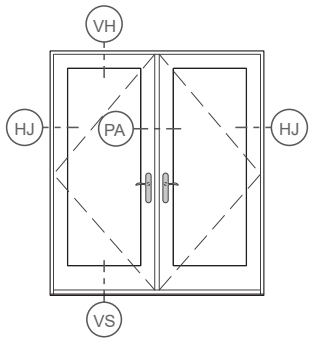

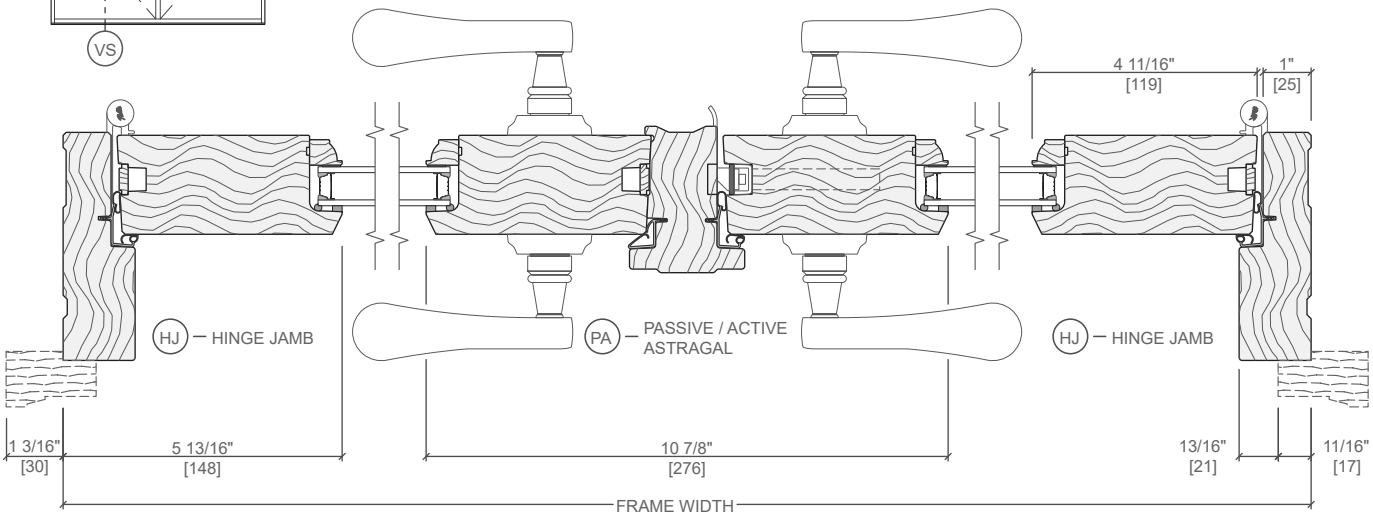

Scale 3" = 1' 0"
All dimensions are approximate.

See www.Pella.com for mullion limitations and reinforcing requirements.

Pella® Reserve™ Traditional In-Swing Patio Door

Unit Sections – Wood Exterior, Putty Glaze Exterior Profile, Triple-Pane

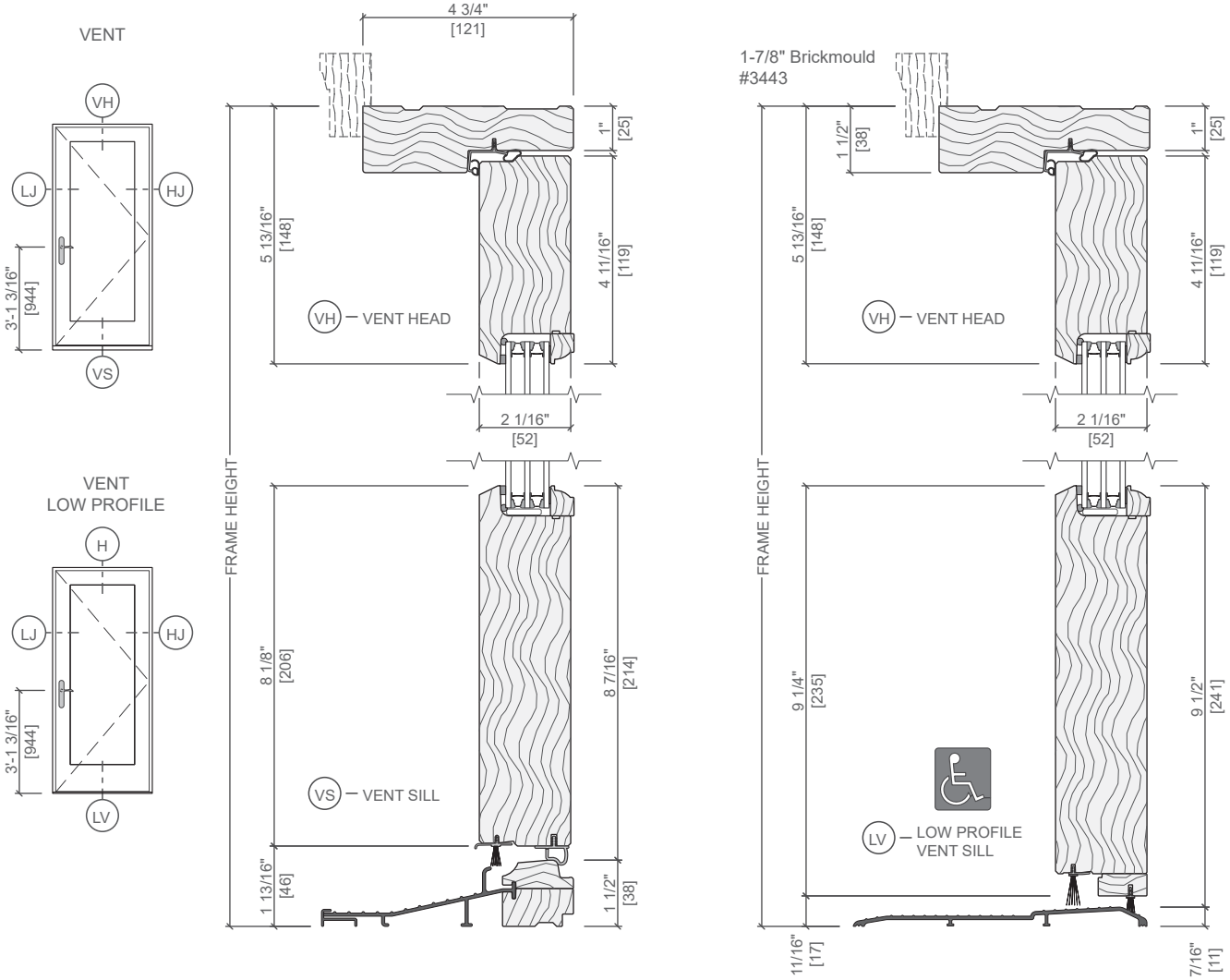

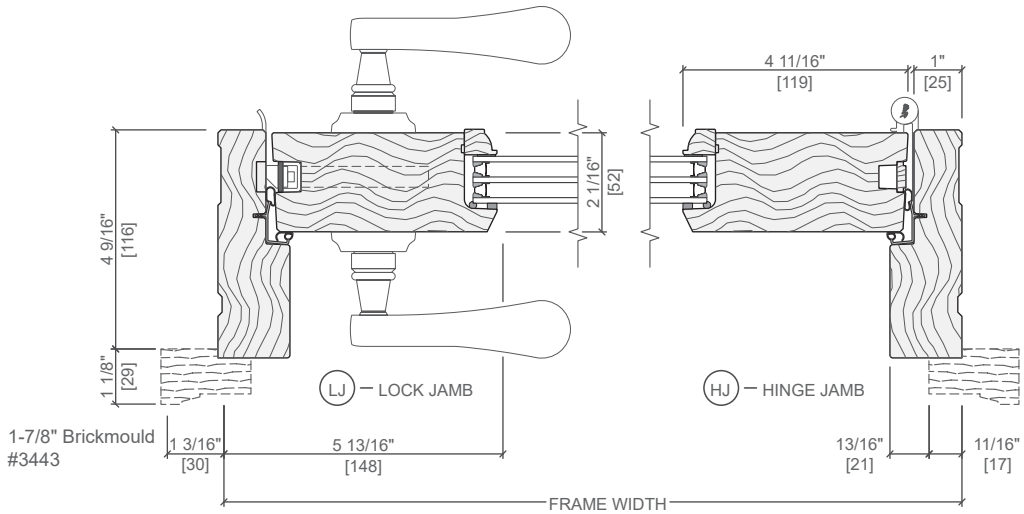

Scale 3" = 1' 0"
All dimensions are approximate.

Water resistance is 0 psf for doors with low profile sill.

Unit Sections – Handle Hardware Dimensions

VIRAGO

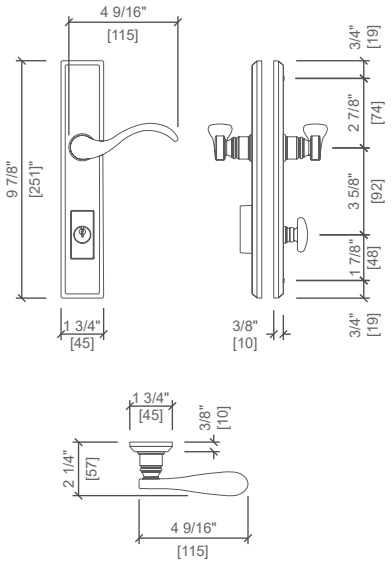

LOCUS

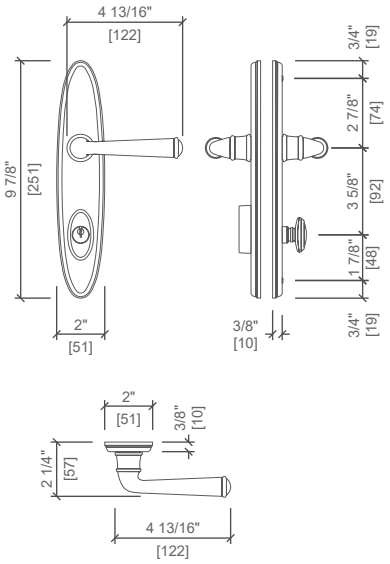

RUSTIEK

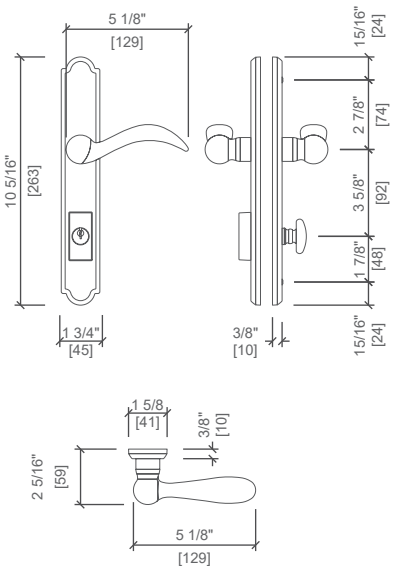

SPIERE

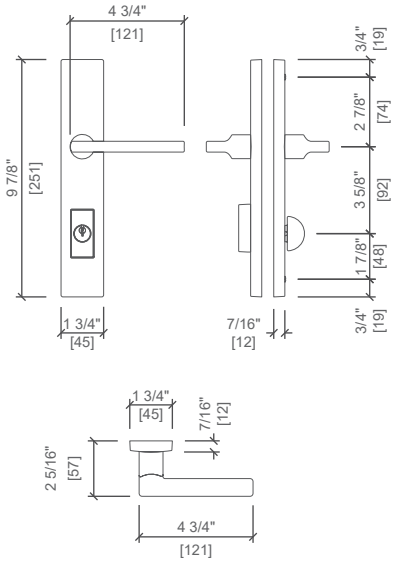

GUSTO

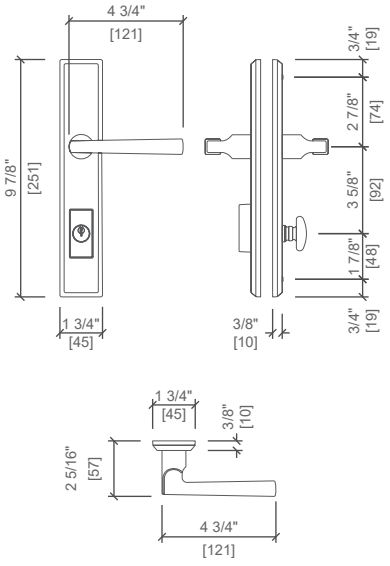

Standard

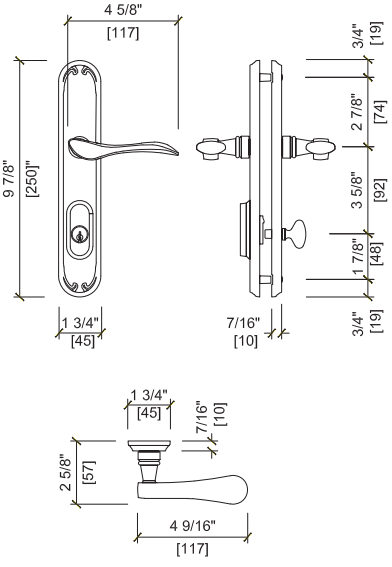

Pella® Reserve™

Traditional Wood & Clad/Wood

Exquisitely designed windows and doors with unparalleled historical detailing.

Double-Hung Interior

Double-Hung Exterior

- **Historical details**
  Our most historically authentic line of wood windows and patio doors. Featuring through-stile construction, deliberate proportions and intricate profiles. Pella Reserve – Traditional products are the ideal choice for historical renovations and traditional building projects.
- **Authentic hardware**
  Complement your project with historically authentic spoon-lock window hardware. Our Antiek casement window hardware is inspired by period furniture to deliver authentic traditional style.
- **Architectural interest**
  Pella's Integral Light Technology® grille helps capture the look of true-divided-light without sacrificing energy performance. Further your aesthetic with the putty profile, recreated with historically accurate angles to provide meaningful depth and a realistic shadow. Pella Reserve products offer the industry's deepest sash dimension.
- **Virtually unlimited customization**
  If you can dream it, we can build it with our most customizable product line. From extra tall to extra wide, Pella can craft unique windows that complement your aesthetic. Custom sizes, grille patterns and designs, finishes, wood types and glass options are available.
- **Tailor-made solutions**
  From preliminary drawings to installation, Pella's expert team of architects, engineers, drafters and consultants can work to deliver custom window and door solutions for your project. Partner with Pella to achieve your unique vision without concessions.
- **Intentional innovation**
  The award-winning Integrated Rolscreen® retractable screen preserves aesthetics and the view. It is a double- and single-hung screen that appears when you open the window and rolls away, out of sight, when you close it.
- **Durable interiors and extruded aluminum exteriors**
  To help save you time on the jobsite, interior finish options are available in a variety of paints and stains, or primed and ready-to-paint. To complement your exterior aesthetic, choose from our carefully curated color palette or define your own custom color for your project.
- **ENERGY STAR® certified[1]**
  Pella wood products offer energy-efficient options that will meet or exceed ENERGY STAR guidelines in all 50 states.
- **Testing beyond requirements**
  All wood products and testing are not created equal. Pella raises the bar on industry standard testing and beyond to deliver long-lasting products and reduced callbacks. Every Pella wood window and door passes 5, on average, quality checks before it arrives on the jobsite.
- **Best limited lifetime warranty[2]**
  Pella Reserve products are covered by the best limited lifetime warranty in the business for wood windows and patio doors.[2]

Available in these window and patio door styles:

Special shape windows also available.

[1,2] See back cover for disclosures.

Product Specifications

Window & Patio Door Styles	Min. Width	Min. Height	Max.Width	Max. Height	Performance Class & Grade	Performance Values U-Factor	SHGC	STC	Frame / Install
Awning	13-¾"	13-¾"	59"	59"	LC30 – CW50	0.25-0.29	0.18-0.47	27-35	Fold-out Fin, Block Frame, EnduraClad Exterior Trim / Brickmould
Casement	13-¾"	13-¾"	47"	108"	R35-CW50	0.25-0.29	0.18-0.47	27-34	Fold-out Fin, Block Frame, EnduraClad Exterior Trim / Brickmould
Fixed Casement	10"	10"	144"	144"	R35-CW50	0.25-0.29	0.18-0.47	27-35	Fold-out Fin, Block Frame, EnduraClad Exterior Trim / Brickmould
Double-Hung	14"	24-3/8"	48"	96"	CW30-CW50	0.25-0.30	0.19-0.53	28-35	Fold-out Fin, Block Frame, EnduraClad Exterior Trim / Brickmould
Precision Fit Double-Hung	13-½"	23-¾"	48"	84"	CW40-CW50	0.25-0.31	0.19-0.53	26-30	Pocket Replacement
Monumental Hung	13-¾"	24"	72"	144"	LC25-CW50	0.25-0.30	0.17-0.47	29-34	Fold-out Fin, Block Frame, EnduraClad Exterior Trim / Brickmould
In-Swing Hinged Patio Door (Single)	18"	36"	48"	119-½"	LC40-LC55	0.25-0.29	0.14-0.40	31-35	
In-Swing Hinged Patio Door (Double)	36"	36"	96"	119-½"	LC40-LC55	0.25-0.29	0.14-0.40	31-35	
Out-Swing Hinged Patio Door (Single)	18"	36"	48"	119-½"	R50-LC70	0.25-0.30	0.14-0.39	30-36	
Out-Swing Hinged Patio Door (Double)	36"	36"	96"	119-½"	R50-LC70	0.25-0.30	0.14-0.39	30-36	
Sliding Patio Door (O)	30-¾"	74"	60-¾"	119-½"	LC40-LC70	0.29-0.32	0.15-0.42	—	
Sliding Patio Door (OX, XO)	59-¼"	74"	119-½"	119-½"	LC35-LC65	0.29-0.32	0.15-0.42	29-35	
Sliding Patio Door (OXO)	90"	74"	180"	119-½"	LC30-LC45	0.29-0.32	0.15-0.42	—	
Sliding Patio Door (OXXO)	116-1/8"	74"	236-1/8"	119-½"	LC25-LC40	0.29-0.32	0.15-0.42	—	
Multi-Slide Patio Door	40-¼"	50-½"	701-5/8"	119-½"	R15-LC25[3]	0.30 – 0.36	0.15 – 0.46	31	For more info visit PellaADM.com
Bifold Patio Door	31-¾"	55-½"	312"	119-½"	R15-LC25[3]	0.26-0.44	0.13-0.45	—	

Window sizes available in 1/8" increments
Special sizes available. For more information regarding performance, visit pella.com/performance. For more information regarding frame and installation types, visit PellaADM.com.

Grilles

Integral Light Technology®

Choose the look of true divided light without sacrificing energy performance.

Putty Glaze Exterior with Ogee Interior[4] 7/8", 1-1/4" or 2"

Putty Glaze Exterior with Ogee Interior[4] 7/8", 1-1/4" or 2"

Ogee Exterior with Ogee Interior[4] 7/8", 1-1/4" or 2"

Cross Sections

Cross Sections

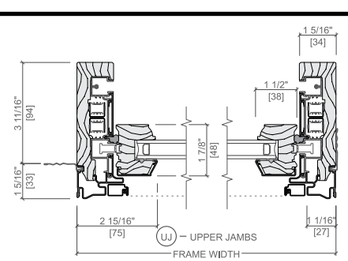

Optional Fold-out Installation Fin

The double-hung cross sections provide visual reference to the historic putty exterior profile and traditional, beveled Ogee interior that add architectural interest to your project.

[3,4] See back cover for disclosures.

Window Hardware

Classic Collection

Get a timeless look with authentic styles in classic finishes.

Fold-away Crank
Antiek

Spoon-Style Lock

Finishes:

Champagne

White

Brown

Matte Black

Oil-Rubbed Bronze

Satin Nickel

Satin Brass

Rustic Collection

Create a distinct and charming look with distressed finishes.

Fold-away Crank
Antiek

Spoon-Style Lock

Finishes:

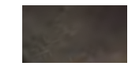

Distressed Bronze

Distressed Nickel

Essential Collection

Select from popular designs and finishes to suit every style.

Fold-away Crank

Cam-Action Lock

Finishes:

Champagne

White

Brown

Matte Black

Oil-Rubbed Bronze

Satin Nickel

Satin Brass

Patio Door Hardware

Classic Collection

BALDWIN

Choose timeless pieces, created in collaboration with Baldwin® Hardware, for a look that will never go out of style.

Hinged & Bifold Patio Door Handle
Virago

Sliding & Multi-Slide Patio Door Handle
Ambrose

Multi-Slide Patio Door Handle[5,6]

Finishes:

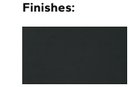

Matte Black

Oil-Rubbed Bronze

Satin Nickel

Satin Brass

Essential Collection

Elevate your style and transform a home with elegant selections.

Hinged & Bifold Patio Door Handle
Standard

Sliding Patio Door Handle
Standard

Multi-Slide Patio Door Handle[5,6]

Finishes:

Champagne

White

Brown

Matte Black

Oil-Rubbed Bronze

Satin Nickel

Satin Brass

Additional hardware collections available. Visit PellaADM.com for more information.

[5,6] See back cover for disclosures.

Colors

Wood Types

Choose the wood species that best complements your project's interior.

Pine

Custom solutions:

Douglas Fir | Mahogany | White Oak | Red Oak | Cherry | Maple

Prefinished Pine Interior Colors

Custom interior finishes, unfinished or primed and ready-to-paint are also available.

White | Bright White | Linen White | Natural Stain | Golden Oak Stain | Early American Stain | Provincial Stain | Dark Mahogany Stain

Red Mahogany Stain | Espresso Stain | Charcoal Stain | Black Stain

Extruded Aluminum-Clad Exterior Colors

Our low-maintenance EnduraClad® exterior finish resists fading. Take durability one step further with EnduraClad Plus which also resists chalking and corrosion.[7]

Black | White | Brown | Fossil

Iron Ore | Portobello | Putty | Almond | Classic White | Brick Red | Hartford Green

Pearl Gray | Soft Linen | Satin Steel | Matte Gray | Wolf Gray | Spice Red | Sage

Frost Blue | Blue Ash

Custom colors are also available.

Added Peace of Mind

Integrated Security Sensors

Integrated wireless security sensors maintain aesthetics, streamline security installation and ensure no warranty loss is caused by post-installation drilling. Sensors can be monitored via the free Pella® Insynctive® App and are compatible with major security panel systems.[8] For more information, go to connectpella.com.

The Best Limited Lifetime Warranty in the Industry

We know your reputation matters and you stake your reputation on quality, dependable products. That's why we have the best limited lifetime warranty in the industry for wood windows and patio doors.[2]

[1] Some Pella products may not meet ENERGY STAR® guidelines in Canada. For more information, contact your local Pella sales representative or go to energystar.gc.ca.
[2] Based on comparing written limited warranties of leading national wood window and wood patio door brands. See written limited warranty for details, including exceptions and limitations, at pella.com/warranty or contact Pella Customer Service.
[3] Ratings are contingent on product configurations.
[4] Color-matched to your product's interior and exterior color.
[5] Flush multi-slide handle is a Pella exclusive design.
[6] Flush multi-slide handle is not available in Champagne.
[7] EnduraClad Plus protective finish is not available with all colors. See your local Pella sales representative for availability.
[8] Requires the Insynctive App on a smart device, an Insynctive Bridge and a wireless home router with internet connection.

© 2024 PELLA CORPORATION • 102 MAIN STREET • PELLA, IOWA 50219 • PRTB2B1223 • W372185

VERTICAL SEAM

- Structural standing seam roof system
- Panel coverages: 12", 16" or 18"
- Rib height: 1-3/4"
- Gauges: 24 ga. standard; 22 ga. optional
- Snap-together panel system with factory-applied side-lap sealant
- Minimum roof slope over open framing 3:12
- Minimum roof slope over solid substrate 1:12
- Concealed clip designed for unlimited thermal movement

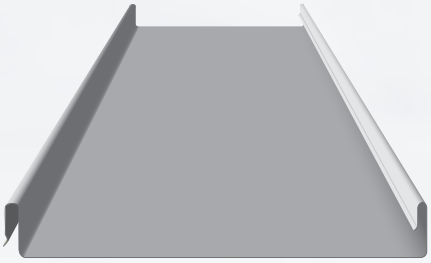

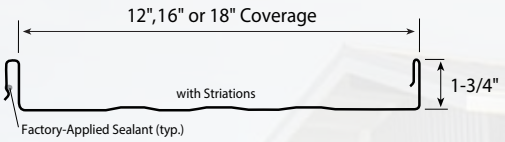

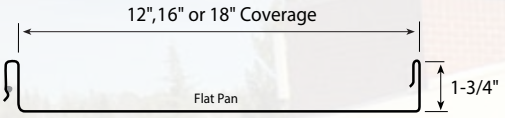

MINI-BATTEN

- Standing seam roof system
- Panel coverages: 12", 16" or 18"
- Rib height: 1" and 1-1/2" with a narrow batten cap
- Gauges: 24 ga. standard; 22 ga. optional
- Minimum roof slope: 3:12
- Concealed clip secures snap-on batten cap

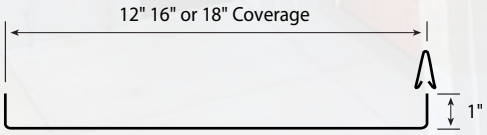

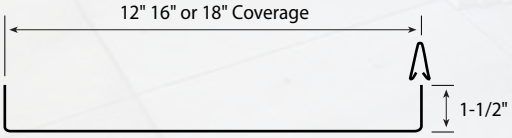

CURVED 1" MINI-BATTEN

- Standing seam roof system
- Panel coverages: 12", 16" or 18"
- Gauges: 24 ga. standard; 22 ga. optional
- Minimum radius: 4'-0" pan and batten
- Concealed clip designed
- Whether it's an accent or an entire roof, Curved Mini-Batten panels give your project a unique look

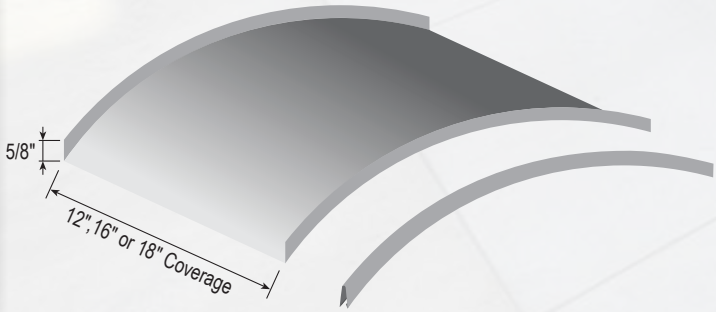

MINI-BATTEN

Condensed Technical Reference

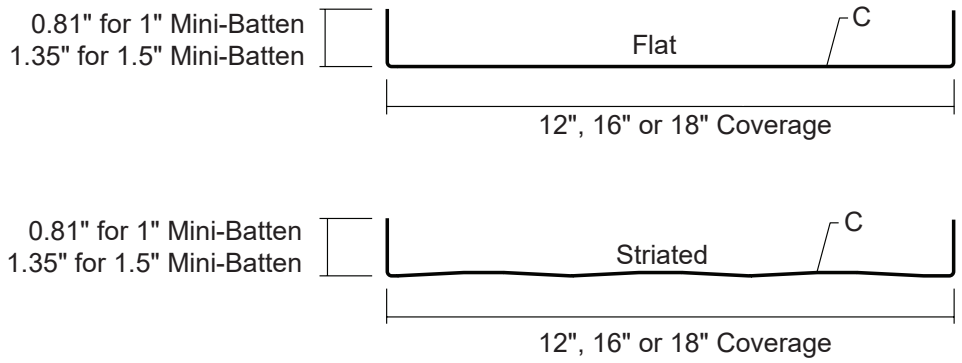

ARCHITECTURAL PANEL | **CONCEALED FASTENED** | **12", 16" OR 18" COVERAGE** | **MINIMUM SLOPE 3:12** | **SOLID SUBSTRATE**

PANEL OVERVIEW

- Finishes: PVDF, MS Colorfast45® and Acrylic-Coated Galvalume®
- Corrosion Protection: AZ55 per ASTM A 792 for unpainted Galvalume®
  AZ50 per ASTM A 792 for painted Galvalume®
  G90 per ASTM A 653 for Galvanized
- Gauges: 26 ga and 24 ga standard; 22 ga optional
- 12", 16" or 18" panel coverage, 1" or 1½" rib height with narrow batten cap
- Panel Length: Minimum: 5'; Maximum: 45' recommended
- Architectural standing rib roof system
- Applies over solid substrate with minimum 30# felt underlayment
- Minimum roof slope: 3:12
- Flat and Striated pan available

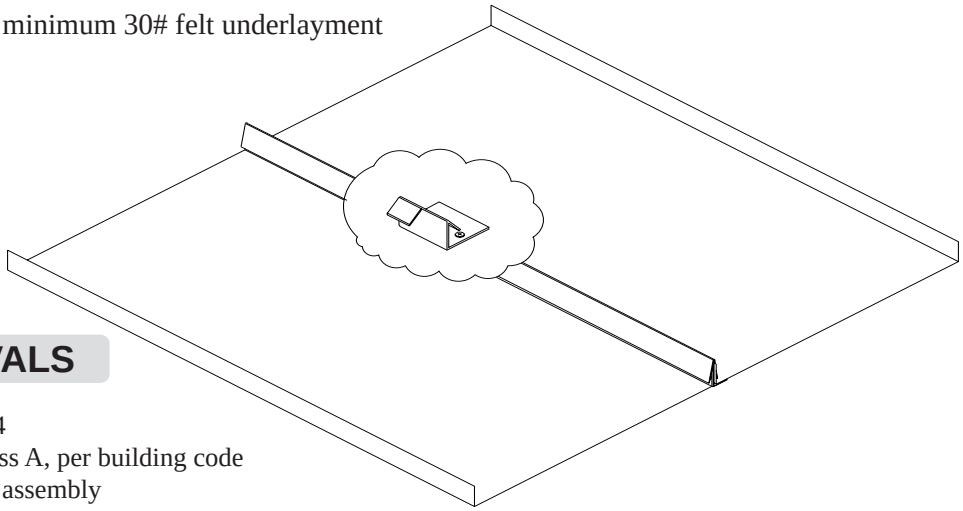

TESTING AND APPROVALS

- UL 2218 Impact Resistance - Class 4
- UL 790 Fire Resistance Rating - Class A, per building code
- UL 263 Fire Resistance Rating - per assembly
- UL 580 Uplift Resistance - Class 90 Constructions:
  1" Mini-Batten: #397, #397A and #430
  1½" Mini-Batten: #352
- ASTM E 1592 Uplift Resistance
- ASTM E 283 Air Leakage - 0.005 cfm/ft^2 at 6.24 psf
- ASTM E 331 Water Panetration - none at 12 psf

MS Metal Sales™

MINI-BATTEN

Condensed Technical Reference

ATTACHMENT DETAILS

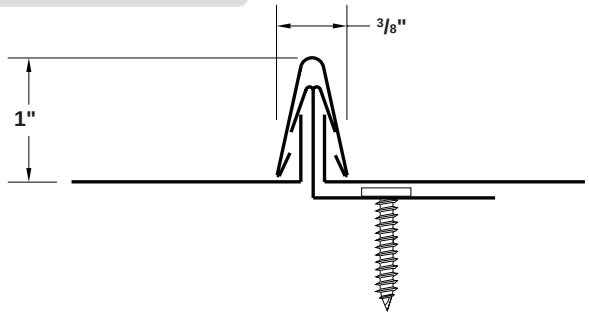

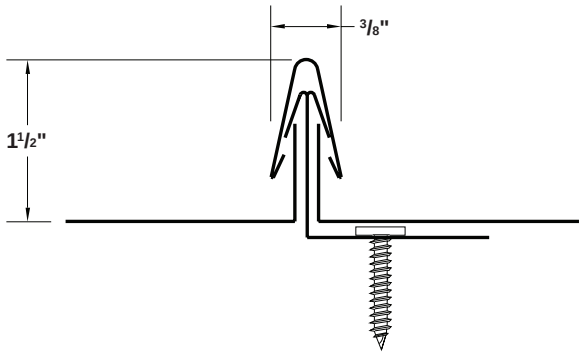

PANEL CLIPS

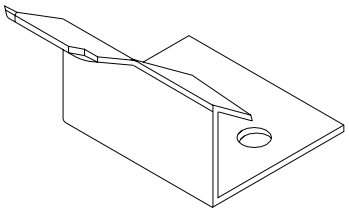

BEND DOWN OVER PANEL

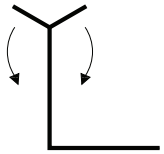

MINI-BATTEN
(1 1/2" rib height)

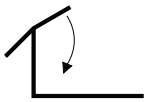

MINI-BATTEN
(1" rib height)

FASTENING INFORMATION

▶ Clips

Clip spacing is based upon the design loads, the spanning capacity of the panels, the fasteners and the support members.

Clips are 0.027" thick, G90 galvanized.

Clips can accomodate thermal expansion and contraction.

▶ Fasteners

Overdriven fasteners will cause panel distortions.

Fasteners should extend 1/2" or more past the inside face of the support material.

Clip Fasteners:
#10-12 Pancake Head Wood Screw

Concealed End Fastener:
#10-12 Pancake Head Wood Screw

Trim Fasterners:
1/4"-14 x 7/8" XL Stitch Screw
1/8" x 3/16" Pop Rivet

©MSMC/3-2023

Metal Sales™ metalsales.us.com

Anchorage, AK 866.640.7663
Bay City, MI 888.777.7640
Deer Lake, PA 800.544.2577
Denver, CO 800.289.7663
Detroit Lakes, MN 888.594.1394
Fontana, CA 800.782.7953
Fort Smith, AR 877.452.3915
Independence, MO 800.747.0012
Jacksonville, FL 800.394.4419
Jefferson, OH 800.321.5833
Mocksville, NC 800.228.6119
Nashville, TN 800.251.8508
Rock Island, IL 800.747.1206
Rogers, MN 800.328.9316
Seattle, WA 800.431.3470
Sellersburg, IN 800.999.7777
Sioux Falls, SD 888.299.0024
Spokane, WA 800.572.6565
Temple, TX 800.543.4415
Woodland, CA 800.759.6019

BOARD OF BUILDING STANDARDS
ARCHITECTURAL REVIEW BOARD
SIGN REVIEW BOARD

12650 Detroit Avenue ● (216) 529-6630 ● FAX (216) 529-5907 ● www.lakewoodoh.gov

Application Cover Page

Docket No.: 05-45-24

Permit No.: BBS24-000047

Applicant Name: Hal Daugherty, Daugherty Construction

Project Address: 1188 Elbur Ave.

Project Name: n/a

Project: Applicant proposes a new portico.

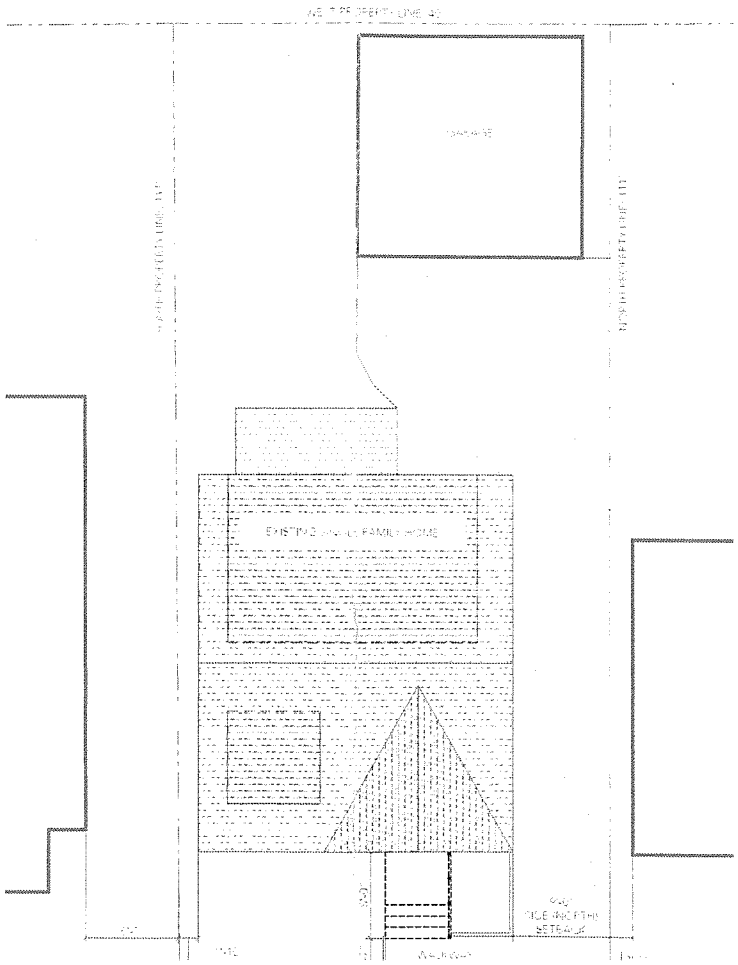

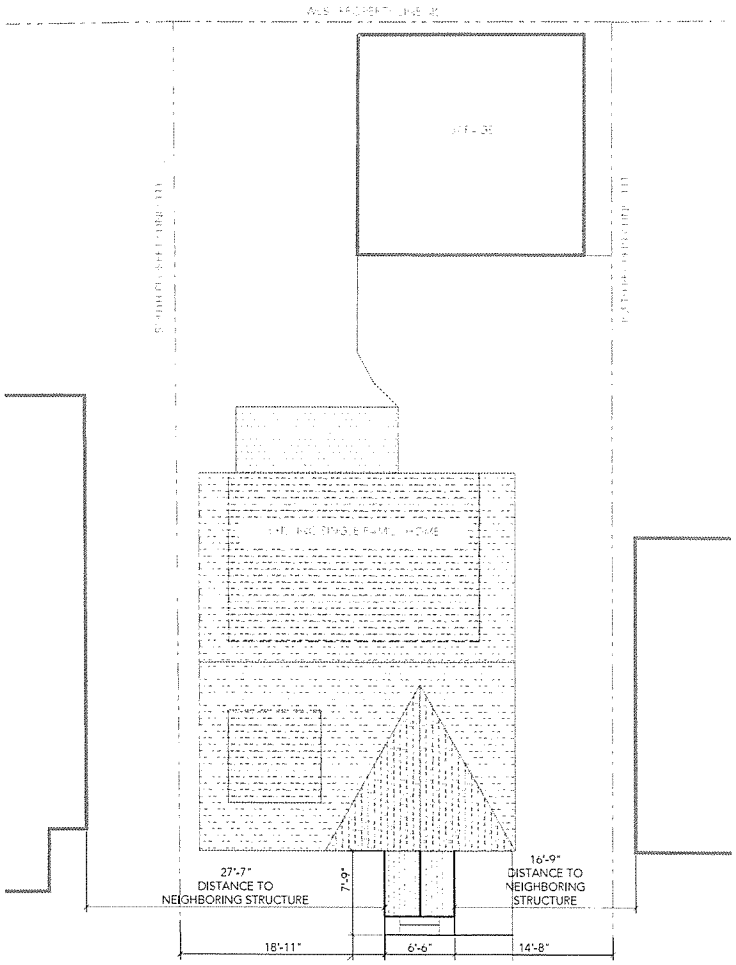

ISSUED FOR:	DATE:
80% CDs	09-08-2023
95% CDs	12-18-2023
PERMIT	01-30-2024

CLIENT/OWNER:
TIMOTHY & LINDSAY
SPILLMAN

PROJECT ADDRESS:
1188 ELBUR AVENUE
LAKEWOOD, OHIO 44107

STATE OF OHIO
ANTONIA ALTIERI
MARINUCCI

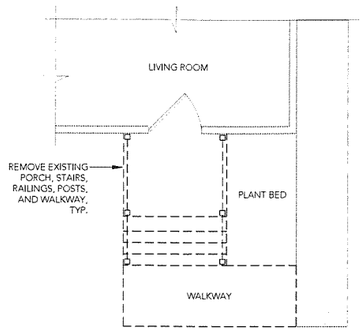

1 EXISTING PLAN
$\frac{1}{4}$" = 1'-0"

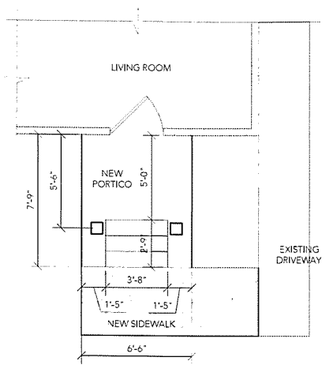

2 PROPOSED PORTICO PLAN
$\frac{1}{4}$" = 1'-0"

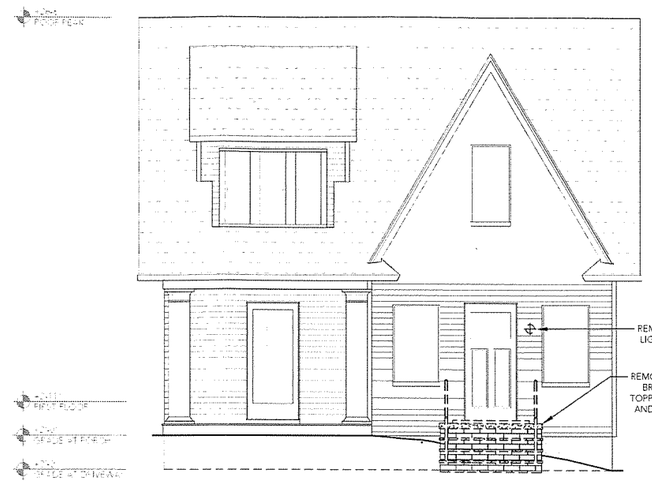

3 EXISTING EAST ELEVATION
$\frac{1}{4}$" = 1'-0"

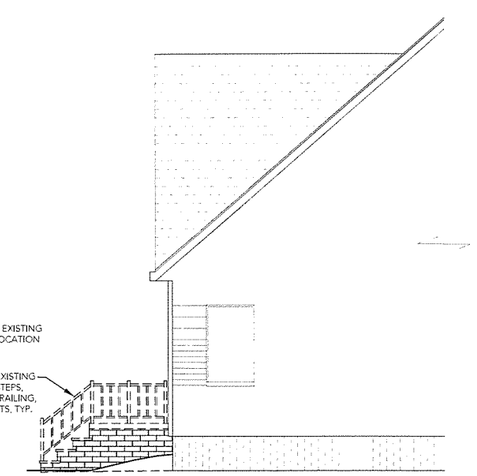

4 EXISTING NORTH ELEVATION
$\frac{1}{4}$" = 1'-0"

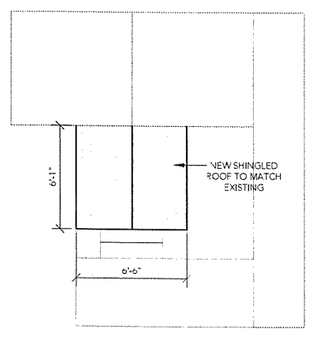

3 PROPOSED ROOF PLAN
$\frac{1}{4}$" = 1'-0"

3 PROPOSED EAST ELEVATION
$\frac{1}{4}$" = 1'-0"

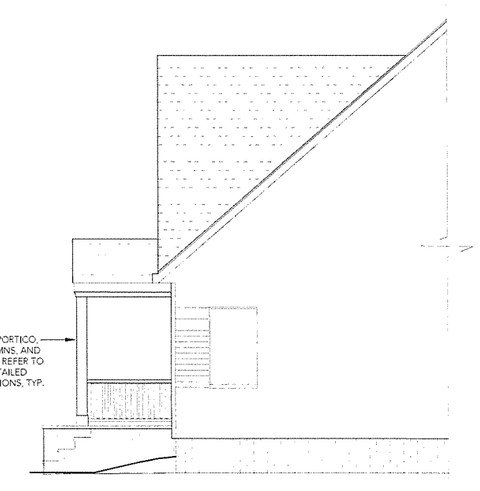

4 PROPOSED NORTH ELEVATION
$\frac{1}{4}$" = 1'-0"

GENERAL DEMO NOTES:

1. ALL DIMENSIONS AND EXISTING STRUCTURE ARE APPROXIMATE; TO BE CONFIRMED IN FIELD DURING
2. DASHED LINES REPRESENT ELEMENTS TO-BE-DEMOLISHED U.N.O.
3. ALL AREAS NOT IN SCOPE TO BE PROTECTED DURING DEMO AND NEW WORK.

GENERAL PROPOSED NOTES:

1. ALL DIMENSIONS AND EXISTING STRUCTURE ARE APPROXIMATE; TO BE CONFIRMED IN FIELD DURING CONSTRUCTION.
2. REFER TO DETAILED ELEVATIONS, MATERIAL SCHEDULE, AND PAINT SCHEDULE FOR DETAILS.

ISSUED FOR:	DATE:
80% CDs	09-08-2023
95% CDs	12-18-2023
PERMIT	01-30-2024

CLIENT/OWNER:
TIMOTHY & LINDSAY SPILLMAN

PROJECT ADDRESS:
1188 ELBUR AVENUE
LAKEWOOD, OHIO 44107

STATE OF OHIO
ANTONIA ALTIERI MARINUCCI
15116390
REGISTERED ARCHITECT

the architetta

Antonia Altieri Marinucci, RA

Architetta, LLC
1455 W. 29th Steet
Cleveland, Ohio 44113

440-539-6388

EXISTING AND PROPOSED PLANS PLANS, ELEVATIONS

A-1

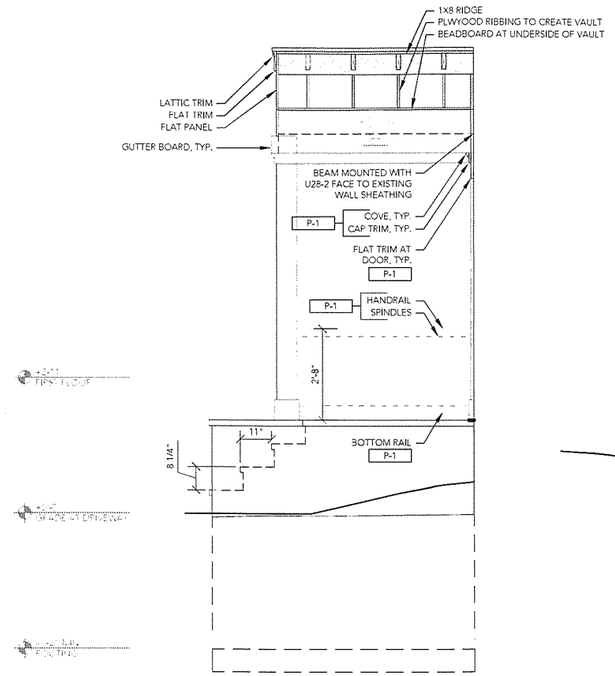

1 DETAILED SECTION AT DOOR
$\frac{1}{2}$" = 1'-0"

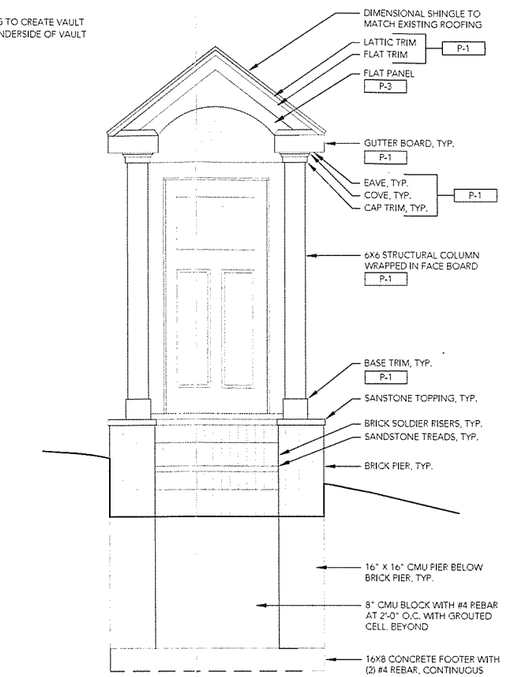

2 DETAILED ELEVATION
$\frac{1}{2}$" = 1'-0"

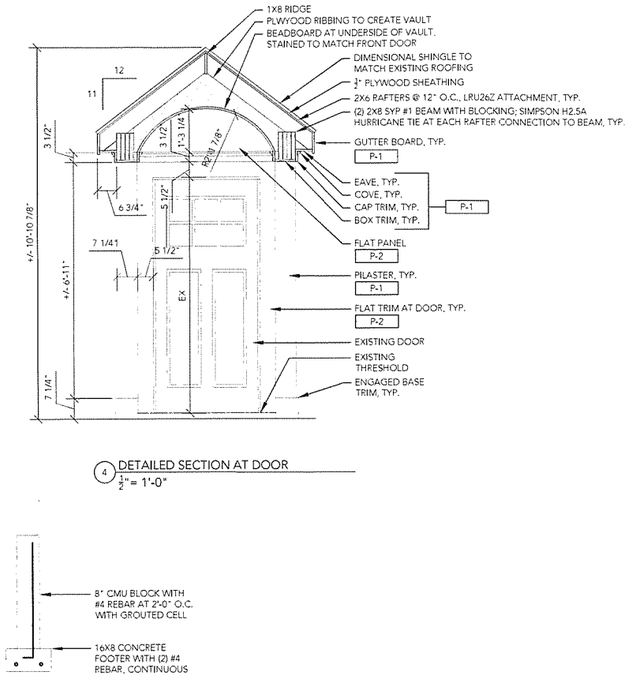

4 DETAILED SECTION AT DOOR
$\frac{1}{2}$" = 1'-0"

3 CMU & FOOTING DETAIL
$\frac{1}{2}$" = 1'-0"

EXTERIOR PAINT SCHEDULE			
ITEM	COLOR/FINISH	MANUFACTURER/PRODUCT	REMARKS
P-1	SW 7636 ORIGAMI WHITE	SHERWIN WILLIAMS EMERALD URETHANE TRIM ENAMEL	REFER TO EXTERIOR ELEVATION DETAILS FOR EXACT LOCATION AND PLACEMENT OF COLORS
P-2	SW 7622 HOMBURG GRAY	SHERWIN WILLIAMS EMERALD URETHANE TRIM ENAMEL	REFER TO EXTERIOR ELEVATION DETAILS FOR EXACT LOCATION AND PLACEMENT OF COLORS
P-3	SW 9563 BEDROCK	SHERWIN WILLIAMS EMERALD URETHANE TRIM ENAMEL	REFER TO EXTERIOR ELEVATION DETAILS FOR EXACT LOCATION AND PLACEMENT OF COLORS

GENERAL NOTES:
1. EXISTING BRICK FOUNDATION TO REMAIN UNPAINTED.

EXTERIOR MATERIAL SCHEDULE				
ITEM	DESCRIPTION	COLOR/FINISH	MANUFACTURER	REMARKS
GUTTER BOARD	4/4 TRIM BOARD, 0.75" X 7.25"	SMOOTH FINISH, PRIMED FOR PAINT (SEE PAINT SCHEDULE)	JAMES HARDIE OR BOREL	REFER TO EXTERIOR ELEVATION DETAILS; INSTALL PER MANUFACTURER INSTRUCTIONS
EAVE	4/4 TRIM BOARD 0.75" X 5.5"	SMOOTH FINISH, PRIMED FOR PAINT (SEE PAINT SCHEDULE)	JAMES HARDIE OR BOREL	-
COVE	1.5" PINE	PRIMED FOR PAINT (SEE PAINT SCHEDULE)	LOCAL SUPPLIER	REFER TO EXTERIOR ELEVATION DETAILS
CAP TRIM	4/4 TRIM BOARD 0.75" X 3.5"	SMOOTH FINISH, PRIMED FOR PAINT (SEE PAINT SCHEDULE)	JAMES HARDIE OR BOREL	REFER TO EXTERIOR ELEVATION DETAILS; INSTALL PER MANUFACTURER INSTRUCTIONS
BOX TRIM	4/4 TRIM BOARD 0.75" X 7.25"	SMOOTH FINISH, PRIMED FOR PAINT (SEE PAINT SCHEDULE)	JAMES HARDIE OR BOREL	-
FLAT TRIM	4/4 TRIM BOARD 0.75" X 5.5"	SMOOTH FINISH, PRIMED FOR PAINT (SEE PAINT SCHEDULE)	JAMES HARDIE OR BOREL	-
ENGAGED COLUMN TRIM	4/4 TRIM BOARD, 0.75" X 7.25"	SMOOTH FINISH, PRIMED FOR PAINT (SEE PAINT SCHEDULE)	JAMES HARDIE OR BOREL	-
ENGAGED BASE TRIM	4/4 TRIM BOARD, 0.75" X 7.25"	SMOOTH FINISH, PRIMED FOR PAINT (SEE PAINT SCHEDULE)	JAMES HARDIE OR BOREL	-
COLUMN FACE BOARD	4/4 TRIM BOARD, 0.75" X 7.25"	SMOOTH FINISH, PRIMED FOR PAINT (SEE PAINT SCHEDULE)	JAMES HARDIE OR BOREL	-
LATTICE TRIM	4/4 TRIM BOARD, 0.75" X 2"	SMOOTH FINISH, PRIMED FOR PAINT (SEE PAINT SCHEDULE)	JAMES HARDIE OR BOREL	-
TOP HANDRAIL	MOULDED HANDRAIL	CEDAR	LOCAL SUPPLIER	REFER TO EXTERIOR ELEVATION DETAILS
SPINDLE	2X2 SQUARE	CEDAR	LOCAL SUPPLIER	-
BOTTOM RAIL	2X4	CEDAR	LOCAL SUPPLIER	-
BEADBOARD	1.5" PINE	PRIMED FOR PAINT (SEE PAINT SCHEDULE)	LOCAL SUPPLIER	-
BRICK	MODULAR BRICK	"MAHOGANY"	GLEN-GHERY	REFER TO EXTERIOR ELEVATION DETAILS; FINISH COLOR IS BASIS-OF-DESIGN; MATCH EXISTING FOUNDATION BRICK IN FIELD
SANDSTONE	SANDSTONE TOPPING	TBD	LOCAL SUPPLIER	REFER TO EXTERIOR ELEVATION DETAILS
LIGHTING	HASTINGS 4-LIGHT SEMI-FLUSH MOUNT	CLASSIC BRONZE	BIRCH LANE	-

ISSUED FOR:	DATE:
80% CDs	09-08-2023
95% CDs	12-18-2023
PERMIT	01-30-2024

CLIENT/OWNER:
TIMOTHY & LINDSAY SPILLMAN

PROJECT ADDRESS:
1188 ELBUR AVENUE
LAKEWOOD, OHIO 44107

STATE OF OHIO
ANTONIA ALTIERI MARINUCCI
1516390
REGISTERED ARCHITECT

the architetta

Antonia Altieri Marinucci, RA

Architetta, LLC
1455 W. 29th Street
Cleveland, Ohio 44113

440-539-6388

SECTIONS, DETAILS, AND SCHEDULES

A-2

Google Maps 1189 Elbur Ave

Lakewood, Ohio

Google Street View

Aug 2019 See more dates

Image capture: Aug 2019 © 2024 Google

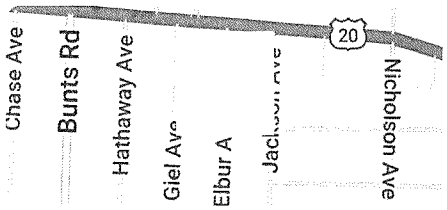

Daugherty Construction, Inc.

COMMERCIAL/RESIDENTIAL ROOFING
SIDING • WINDOWS

22460 Lakeland Blvd. • Euclid, Ohio 44132 • (216) 731-9444 • Fax (216) 731 9644

TO:
Tim Spillman
1188 Elbur Ave.
Lakewood, OH 44107 USA

03/20/2024

Portico Roof Proposal

JOB: WO #11261
ADDRESS: 1188 Elbur Ave., Lakewood, OH 44107

Daugherty Construction Inc. proposes to do the following work:

- **Obtain related permits and inspections**
- **Demolish and haul off existing front porch walls, deck railing and concrete walk in front of home per print**
- **Form and pour new 4000 PSI concrete footer**
- **Supply and install all new brick and sandstone to build new porch per print**
- **Rollock course on front steps will not work, we will use horizonal brick**
- **Supply and install all needed wood framing and rail system per prints**
- **Build new portico entrance per print**
- **Prime and paint it all per print**
- **Supply and install 1 new light fixture per print and fish wires as needed**
- **Remove and reset siding**
- **Owner to supply new house #'s and mailbox**
- **Keep jobsite neat and orderly**
- **2-3 weeks to complete the job**
- **100% completion depends on the weather**
- **Remove debris and clean up jobsite**

- **Terms to be Discussed**

Additional Information:
Front concrete walk will be billed at $ 20.00 per sq. ft. Extra 4000 PSI concrete with float finish and sealed with masonry sealer

PRICE	**$28,211.00**
Down Payment	**$3,211.00**
Balance Due	**$25,000.00**

Approved By:

PRINT NAME

SIGNATURE

Hal Daugherty
Daugherty Construction Inc.

1.5% per month financing charge on unpaid balance from past due

Daugherty Construction, Inc.

COMMERCIAL/RESIDENTIAL ROOFING
SIDING • WINDOWS

22460 Lakeland Blvd. • Euclid, Ohio 44132 • (216) 731-9444 • Fax (216) 731 9644

TO:
Tim Spillman
1188 Elbur Ave.
Lakewood, OH 44107 USA

03/20/2024

Portico Roof Proposal

JOB: WO #11261
ADDRESS: 1188 Elbur Ave., Lakewood, OH 44107

Daugherty Construction Inc. proposes to do the following work:

- **Obtain related permits and inspections**
- **Demolish and haul off existing front porch walls, deck railing and concrete walk in front of home per print**
- **Form and pour new 4000 PSI concrete footer**
- **Supply and install all new brick and sandstone to build new porch per print**
- **Rollock course on front steps will not work, we will use horizonal brick**
- **Supply and install all needed wood framing and rail system per prints**
- **Build new portico entrance per print**
- **Prime and paint it all per print**
- **Supply and install 1 new light fixture per print and fish wires as needed**
- **Remove and reset siding**
- **Owner to supply new house #'s and mailbox**
- **Keep jobsite neat and orderly**
- **2-3 weeks to complete the job**
- **100% completion depends on the weather**
- **Remove debris and clean up jobsite**

- **Terms to be Discussed**

Additional Information:
Front concrete walk will be billed at $ 20.00 per sq. ft. Extra 4000 PSI concrete with float finish and sealed with masonry sealer

PRICE	**$28,211.00**
Down Payment	**$3,211.00**
Balance Due	**$25,000.00**

Approved By:

PRINT NAME

SIGNATURE

Hal Daugherty
Daugherty Construction Inc.

1.5% per month financing charge on unpaid balance from past due

SW 9563
Bedrock
Emerald Designer Edition

SW 7622
Homburg Gray

SW 7636
Origami White
FULL DETAILS

spillman residence

front entry

the architetta

Ricardo Empire Outdoor Semi Flush Mount

4.8 53 Reviews

$221 ~~$260~~

Free 3-5 Day Delivery

$40 OFF your qualifying first order of $250+[1] with a Birch Lane credit card

Pay as low as $15 per month[†] with Birch Lane Financing.

Only 4 Left Arrives by Tue. Apr 30 to 44102

Add to Cart

What We Offer

Professional Installation from $101.99
How It Works

5 Year Protection Plan for $36.99
What's Covered

Any Questions? We're here for you. Call Us Let's Chat

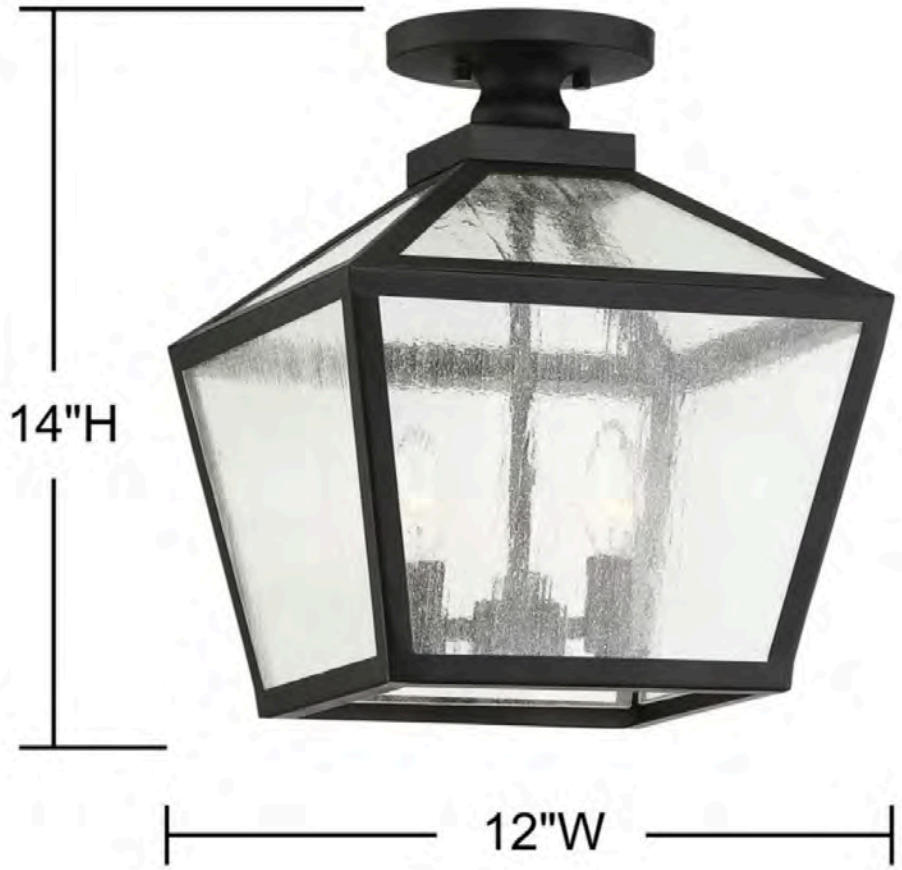

About This Product

Overview **The Details** Shipping & Returns

Features

Fixture Material Metal; Glass

Metal Type Steel

Light Fixture Shape Empire

Canopy Included Yes

Power Source Hardwired

Voltage 120 Volt

What is Dry, Damp or Wet Location Listed? This indicates whether the fixture is safe to use in dry locations, damp locations (moist environments), or wet locations (direct exposure to water).

Weatherproof Yes

Integrated LED No

Bulb Not Included But Required Yes

Recommended Bulb Shape Candle

Recommended Bulb Shape Code C11

Number of Bulbs 3

Maximum Wattage (Per Bulb) 60 Watt

Bulb Base E12/Candelabra

Dimmable Yes

Motion Sensor No

Dusk to Dawn No

Bottom Opening Yes

Shade Included No

Imported Yes

Durability Weather Resistant

Dry, Damp or Wet Location Listed Damp

Specifications

Safety Listing(s) UL Listed

Assembly

Assembly Required Yes

Installation Required Yes

Warranty

Commercial Warranty Yes

Product Warranty Yes

Full or Limited Warranty Limited

Warranty Length 1 Year

Dimensions

Body Dimensions 14" H X 12" W X 12" D

Canopy Dimensions 2.5" H X 5.75" W X 5.75" D

Overall Dimensions 16.5" H X 12" W X 12" D

Overall Product Weight 7.94 lb.