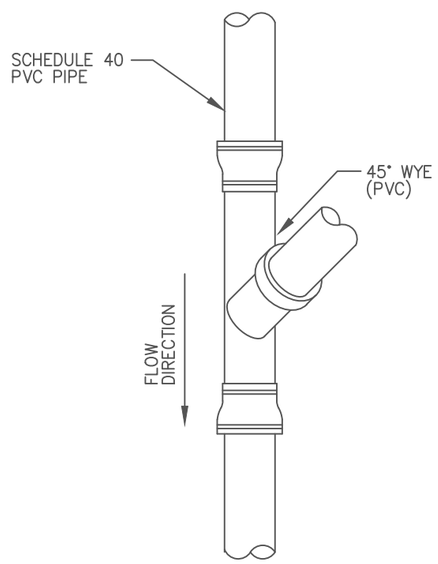

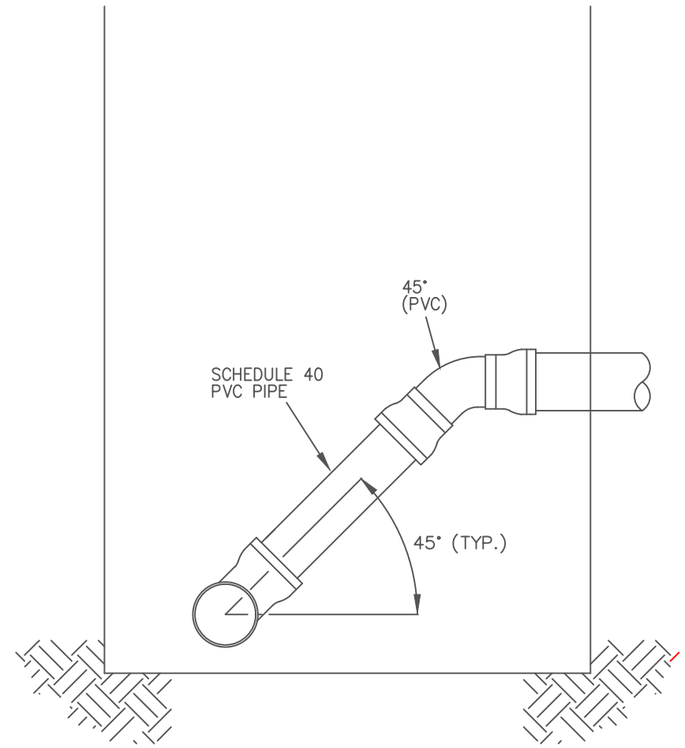

NOTES:

1. WYES SHALL BE INSTALLED IN NEW SANITARY SEWER.

2. CONNECT NEW LATERALS TO EXISTING STORM AND SANITARY WITH "FERNCO" STYLE CONNECTOR IF NO STORM EXISTS CAP NEW LATERAL.

SANITARY SEWER WYE CONNECTION

SCALE: NONE

CITY OF LAKEWOOD, OHIO

08-08-2023
DATE

MARK PAPKE, PE, CPESC
CITY ENGINEER

REVISIONS:
09-25-2006

SCALE:
N.T.S.

STANDARD DRAWING:
SANITARY SEWER WYE CONNECTION

NUMBER:
S-6